SITE-SPECIFIC QUALITY ASSURANCE PROJECT PLAN ADDENDUM 1

Phase II Environmental Site Assessment Reconnaissance Phase
VT Salvage

Ely Street
St. Johnsbury, Vermont

JCO Project Number 3-1946-1

April 8, 2013

Prepared for:
Gail Aloisio
St. Johnsbury Brownfields Program Coordinator
Northeastern Vermont Development Association
36 Eastern Ave., Suite 1
P.O. Box 630
St. Johnsbury, VT 05819

The Johnson Company

ENVIRONMENTAL SCIENCE AND ENGINEERING SOLUTIONS

PARTNERS FOR SMART THINKING AND CREATIVE STRATEGIES

TABLE OF CONTENTS

FORMS

Form A Title and Approval Page 1
Form B Project Organization 2
Form C Introduction 3
Form D Project Objective/Description 12
Form E Sampling Design 14
Form F-2 Sampling and Analytical Methods Requirements 19
Form G SOP Reference Table 21
Form K Analytical Sensitivity and Project Criteria Tables 22

Attachments

Attachment 1 – Geiger counter manuals

Form A
Title and Approval Page

SSQAPP Addendum 1 Phase II Environmental Site Assessment Reconnaissance Phase
VT Salvage, , St. Johnsbury Vermont
Document Title

Kurt Muller P.E., The Johnson Company
Prepared by: (Preparer's Name and Organizational Affiliation)

100 State Street, Suite 600, Montpelier Vermont 05602 (802) 229-4600
Address and Telephone Number

04/08/13
Day/Month/Year

Project Manager: _____
Signature

Kurt Muller, P.E.
Printed Name/Date

QA Officer: _____
Signature

Joel Behrsing, P.E.
Printed Name/Date

U.S. EPA Project Manager: _____
Signature

Kathleen Castagna
Printed Name/Date

EPA QA Reviewer: _____

Robert Reinhart
Printed Name/ Date

VT DEC Project Manager Approval: _____
Signature

Matthew Becker
Printed Name/Date

St. Johnsbury Brownfield Program: _____
Signature

Gail Aloisio
Printed Name/Date

Form A
Title and Approval Page

SSQAPP Addendum 1 Phase II Environmental Site Assessment Reconnaissance Phase
VT Salvage, , St. Johnsbury Vermont
Document Title

Kurt Muller P.E., The Johnson Company
Prepared by: (Preparer's Name and Organizational Affiliation)

100 State Street, Suite 600, Montpelier Vermont 05602 (802) 229-4600
Address and Telephone Number

04/08/13
Day/Month/Year

Project Manager: _____
Signature

Kurt Muller, P.E. _____
Printed Name/Date

QA Officer: _____
Signature

Joel Behrsing, P.E. 4/15/13
Printed Name/Date

U.S. EPA Project Manager: Kathleen Castagna 4/16/13
Signature

Kathleen Castagna _____
Printed Name/Date

EPA QA Reviewer: _____

Robert Reinhart 4/16/13
Printed Name/ Date

VT DEC Project Manager Approval: _____
Signature

Matthew Becker 4/16/13
Printed Name/Date

St. Johnsbury Brownfield Program: Gail Aloisio
Signature

Gail Aloisio 4/16/13
Printed Name/Date

Form B
Project Organization

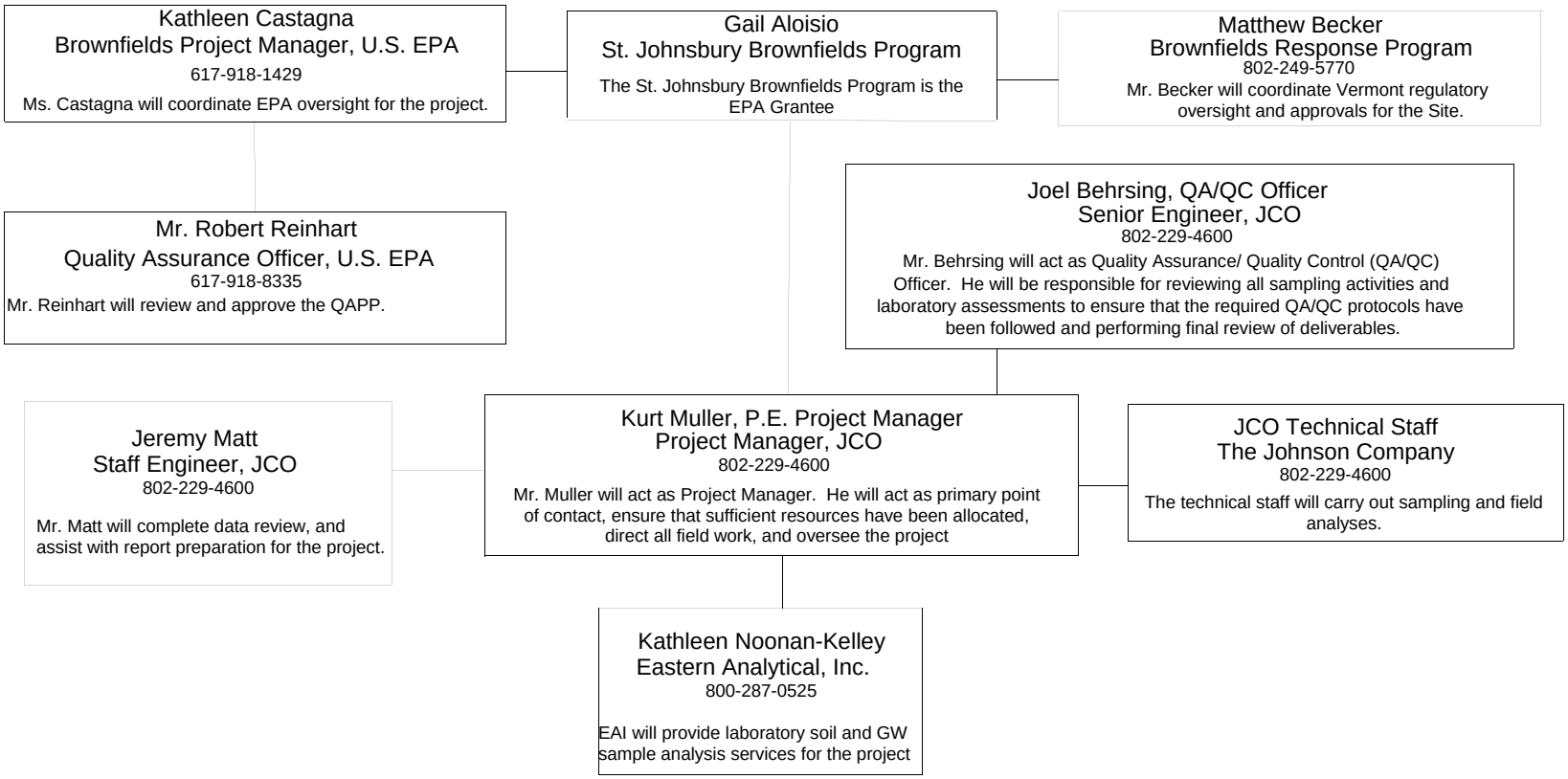

Form C
Introduction

The Johnson Company was retained by The St. Johnsbury Brownfields Program (SJBP) to design and conduct a Phase II Environmental Site Assessment (ESA) of five parcels (0 Ely Street Lot 8, 0 Ely Street Lot 8.1, 85 Ely Street, 64 State Street, and 53 State Street), totaling 6.62 acres (the Site). This document describes the initial reconnaissance phase of the overall investigation, which is intended to provide data necessary to increase the efficiency and effectiveness of subsequent investigation activities. The Site is owned by Vermont Salvage Holdings, LLC and is located in an industrial/commercial corridor off of U.S. Route 2 (see Figure 1). The Site currently hosts a stitching business and a hunting supply retail store. Previous Site uses have included a salvage yard, a wood and metal working shop, an auto body and auto repair business, a residence, a railroad corridor, a storage facility owned by St Johnsbury Hide & Tallow, and an oil warehouse. The Site abuts approximately 950 feet of the southern bank of the Moose River and various debris from past dumping are visible along the riverbank.

The proposed reconnaissance phase of the investigation is the first step in achieving the overall objective of this project, which is to adequately characterize and delineate potentially impacted soil, interior drain/pit material, and building materials in anticipation of developing an Environmental Protection Agency (EPA) and Vermont Department of Environmental Conservation (VTDEC) approved Corrective Action Feasibility Investigation (CAFI) and Corrective Action Plan (CAP) that presents the remedial actions required prior for reuse of the Site. One potential re-use scenario is affordable housing units for seniors.

This document is an addendum to The Johnson Company's 2010 Generic Quality Assurance Project Plan (QAPP) Update RFA 07285, which provides detailed information regarding the sampling and analytical methodology typically used during brownfield investigations. The scope of work presented herein is based on discussion with the Property owner (Mr. Steve Dolgin), information provided by SJBP, observations made during a January 9, 2012 Site visit, and review of the limited list of Recognized Environmental Conditions (RECs) presented in the July 2012 Phase I ESA report prepared by another consultant. The Johnson Company reevaluated the available Site information and developed a more comprehensive list of RECs than was presented in the Phase I ESA. Because of the wide variety of potential environmental concerns presented on this list, The Johnson Company determined that it was pre-mature to immediately implement a formal Phase II investigation (soil borings, monitoring wells, analytical sampling, etc.) without some additional location specific information that could focus the investigation efforts in areas with confirmed environmental impacts. In order to generate this additional information, the proposed reconnaissance phase is presented herein and is intended to serve as a preliminary assessment that will utilize field-screening methods to gather data and identify "problem" areas on the Site where analytical samples will be collected during a follow-up field effort. This Site-Specific QAPP (SSQAPP) describes the preliminary

"Site reconnaissance" tasks only; additional SSQAPP(s) will be developed as necessary for a follow-up field investigation.

Problem Definition

The Site has a long history of commercial and industrial uses, including salvage yard activities, wood and metal working, and auto body and automobile repair. Figure 2 shows the layout of the Site parcels along with the RECs associated with each parcel. According to Mr. Dolgin, the salvage yard has received a wide variety of material including scrap automobiles, appliances, computers, used 55-gallon drums, boiler and tank carcasses, tires, potentially radioactive material from a former radar station, and miscellaneous scrap metal during its operation, which started in the mid-1950s and spanned a period of approximately 50 years. In addition, the Site is located in a commercial/industrial corridor adjacent to a former railroad line and hazardous waste sites. In addition, a railroad spur reportedly extended onto the 0 Ely Street Lot 8 parcel. The Johnson Company is not aware of any prior Phase II investigation activities focused on identifying potential impacts to the Site. Traditionally when creating a scope of work for a Phase II ESA, the investigation is designed to address specific RECs that are clearly outlined in a Phase I ESA. The Phase I ESA that was provided, failed to identify Site-specific RECs, and therefore The Johnson Company has developed the following list of RECs (below) which will be the focus of the Phase II Investigation (Reconnaissance Phase and follow-up efforts):

> *Fires & Trash Burning (Site-wide concern):* Structural fires and trash burning may have resulted in aerial deposition of SVOCs, metals, and/or dioxins. Impacts from these contaminants are likely to be more prevalent in shallow soils than in the subsurface.
>
> Radioactive Materials *(Site-wide concern):* During a routine Canadian border crossing by a waste hauler that had collected material from the Site (although potentially from other sites as well), a single drum reportedly tripped the radiation detectors at the U.S. / Canadian border. According to Mr. Dolgin, the drum was returned to the Site. In a follow-up telephone conversation between The Johnson Company and Mr. Dolgin regarding this incident, it was suggested that the contents of this particular drum may not have originated from the Site. Mr. Dolgin further explained that if the material did originate from the Site it is unknown where it was stored prior to transport. Following the incident at the Canadian border crossing, the drum was reportedly stored in the former American Fork & Hoe building (which later burned), although Mr. Dolgin was uncertain of its whereabouts and suggested it may have been moved before the fire occurred. Mr. Dolgin also indicated that members of the fire department inspected this drum, prior to the building fire, and did not identify "any problems" (presumably referencing the Geiger counter screening mentioned in the Phase I ESA).

Salvage Yard Activities *(Site-wide concern):* According to Mr. Dolgin, the salvage yard accepted a wide variety of scrap material, including appliances, cars, "empty" containers (cans, buckets, drums, and tanks), electronic equipment, heating equipment, etc. These and other salvaged items may have contained residual hazardous materials which include petroleum products, solvents, paints, degreasers, asbestos, used oil, automotive liquids, dielectric fluids, building materials, etc. Potential impacts from these types of sources are likely greater at or near the surface, although related contaminants may have migrated to deeper soils and groundwater.

Rail Road *(Site-wide concern):* Rail corridors are often considered a recognized environmental condition for several reasons. Aerial deposition of partially burnt hydrocarbons (coal fired engine exhaust) from the nearby railroad and the railroad spur may have resulted in surficial soil contamination at the Site. In addition, herbicides may have been used to control plant growth along the railroad corridor(s), rail car braking systems had historically used asbestos-containing material in the brake linings, and PCB-containing electrical equipment has historically been used in diesel-electric locomotives. Finally, rail transport has historically been a cost effective method of transporting large quantities of potentially hazardous liquid or debris, which has the potential for being released during transport to the underlying soil associated with the corridor.

Salvaged ASTs and USTs: According to the Phase I ESA, there are former ASTs and USTs on the 0 Ely Street, Lot 8 parcel, the 53 State Street parcel, and the 64 State Street parcel that had been salvaged. The former contents of these tanks are unknown, but may have been hazardous and could have potentially been released during storage or salvage activities. Potential contaminants include VOCs, SVOCs. Because the tanks may have been used to store waste oil, metals are also a potential contaminant.

55-Gallon Drums: A large number of mostly "empty" drums are present at the Site, many of which appear to be in poor condition. This presents the question of whether or not they arrived empty or if their contents were released since being accepted on Site. Drums can be used to store a variety of potentially hazardous materials: leaks from rusted drums could have resulted in impacts to both soil and groundwater.

Computer Hardware: Computer equipment is known to contain many hazardous materials including heavy metals and, in older equipment containing vacuum tubes, PCBs. This type of equipment, exposed to the elements, presents a concern that these types of contaminants could have been released to the ground surface, subsurface and possibly groundwater. This computer hardware dumping appears to be limited to the 0 Ely Street Lot 8 parcel.

Potentially Contaminated Fill: Based on visual inspection of Site topography along the bank of the Moose River, fill appears to have been placed along the river to level the Site and create more usable land. In particular, the surface grade may have been adjusted by as much as 10-feet or more along the northern boundary of the 85 Ely Street parcel. The origin of this fill is unknown and should be characterized to confirm a lack of hazardous constituents.

Automobile Crushing/Storage: According to Mr. Dolgin, automobile crushing occurred at the western end of the 0 Ely Street Lot 8 parcel. Prior to crushing, Mr. Dolgin reported that the engine oil and coolant reservoirs were drained and the fuel tanks removed. Mr. Dolgin also indicated that there was a mechanism for collecting and disposing of this liquid waste (although he is unsure of the details); however, he did suggest that releases of automotive fluids to the ground surface were possible.

Waste Oil/Used Oil Filters: The used oil filters present on the 0 Ely Street Lot 8 and the 53 State Street parcels may have released waste motor oil to the underlying soil, resulting in potential subsurface soil and groundwater impacts.

Vermont Tool & Die Shavings: Mr. Dolgin reported that, approximately 30-years ago, shavings from the Vermont Tool & Die Company were received at the salvage yard and stored briefly near the western end of the 0 Ely Street Lot 8 parcel. Historically, before they were banned from use, PCBs had been used in cutting oil. Given the time frame that the shavings would have been produced suggests they could have been coated with PCB-containing cutting oil.

Potentially Hazardous Building Materials in Fork & Hoe Building (0 Ely Street Lot 8.1), Trailers (0 Ely Street Lot 8) and In-Use Building (53 State Street): Given the observed age of the former American Fork & Hoe building, trailers on the 85 Ely Street parcel, and the 53 State Street building that remains in-use, the construction or later improvement of these buildings may have included the use of PCB-containing building materials, lead-based paint, and/or asbestos-containing materials.

Coal Ash and Slag: Fork & Hoe Building (0 Ely Street Lot 8.1): Coal ash and/or slag from the forge that was associated with the American Fork & Hoe building may have been disposed of on Site. Coal ash and slag may contain hazardous constituents, such as semi-volatile organic compounds (SVOCs), metals, and dioxins.

Machine Shop: Fork & Hoe Building (0 Ely Street Lot 8.1): The machine shop associated with the former American Fork & Hoe building may have utilized PCB-containing cutting oil. Based on review of the Sanborn fire insurance maps, the machine shop appears to have been located in the western end of the building. While the bulk of the building has been destroyed by a fire and cannot be accessed safely, the floor near the former machine shop appears accessible.

Painting Area: Fork & Hoe Building (0 Ely Street Lot 8.1): The Sanborn fire insurance maps also show "Painting" in the western end of the American Fork & Hoe Company. Contaminants potentially associated with paints include VOCs, SVOCs, metals, and PCBs.

Oil Warehouse: Fork & Hoe Building (0 Ely Street Lot 8.1)
The Sanborn Fire Insurance maps show the label "Oil Ho" (warehouse) in connection with the Fork & Hoe building. No indication of the type or purpose of this oil is provided on the maps, but leaks or spills may have occurred in or around this structure.

Adjacent Hazardous Waste Sites: Two Site parcels (0 Ely Street Lot 8 and 64 State Street) are adjacent to / or down gradient from active or former State listed hazardous waste sites. Contamination from these sites may have migrated onto the Site. Specifically, a former gasoline filling station, the Portland Street Valero (Bedards Mobil), was listed as a hazardous waste site in 1993 after subsurface soil and groundwater contamination was identified during the closure of five underground storage tanks on that property. Subsequent soil vapor screening and groundwater sampling (for the truncated petroleum list of VOCs: benzene, toluene, ethyl benzene and xylenes (BTEX), and methyl tert butyl ether (MTBE)) identified significant impacts to groundwater. In June 1999, a soil vapor extraction and air sparging system was installed at this site by Lincoln Applied Geology (LAG). This initial remediation system had limited success and the system was dismantled and removed in July 2003. A multi-phase extraction pilot test was conducted by LAG in May 2004; this also proved ineffective and was subsequently removed. Annual monitoring is on-going; the most recent monitoring report available (dated April 19, 2010) shows a groundwater plume extending off of this property to the northwest, in the direction of the Site. Based on preliminary review of the most recent report, the impacted groundwater does not appear to extend as far as the Site, as the sample collected from MW-13 (near the southeast corner of the 64 State Street parcel) reported no detectable VOC concentrations.

A second adjacent property, True Temper, was listed as an active hazardous waste site in 1990 after acetone and MTBE were detected at concentrations above Vermont Groundwater Enforcement Standards. Follow-up sampling in 1997 reported no detectable concentrations of the contaminants of concern in groundwater and the site was issued Site Management Activity Completed (SMAC) status in a letter dated October 7, 1997.

The information available regarding these two nearby hazardous waste sites does not indicate they have impacted the Site, but they need to considered when developing the Phase II ESA approach, and when interpreting the collected Phase II data.

Aboveground Storage Tank (AST) Fork & Hoe Building Since the building fire and collapse, the heating oil AST associated with the former Fork & Hoe building is no longer in service and the tank's contents or condition is unknown, because the area of the building where the AST is located cannot be safely accessed. Until the building is fully demolished details related to this AST will likely not be fully understood.

Underground Storage Tank (UST) 53 State Street: Mr. Dolgin reported that the 53 State Street building is currently served from an interior 275-gallon fuel oil AST, and that the 500-gallon UST (#2 fuel oil) located outside the northern exterior wall of the building is abandoned. The underlying material of the abandoned UST should be assessed to determine if a release has occurred. Also, Vermont State regulations require that any tank which is out of service for more than one year be appropriately decommissioned.

Motor Oil Release: A patch of stained, stressed vegetation was noted in the Phase I ESA near a piece of heavy equipment. This is reportedly the result of an oil release, which occurred during maintenance of the equipment. The type and quality of the oil is unknown and may have contained VOCs, SVOCs, metals, and/or PCBs.

Floor Drains: The Phase I ESA identified four floor drains in the 53 State Street building; these drains may have accepted spills of potentially hazardous materials. Mr. Dolgin indicated that these floor drains are connected to the municipal sewer; however no formal documentation confirming this connection has been reviewed. Also, the condition of the sub-slab piping and fittings has not been confirmed and therefore it is possible that the building's sub-surface have been adversely impacted due to a breached pipe or fitting.

Automotive Repair Pit: During the January 9, 2013 Site walkover an automotive repair pit was identified in the eastern end of the 53 State Street building; this pit could have acted as a pathway to subsurface soils of potentially hazardous materials that may have been drained or released into the pit. Mr. Dolgin indicated that this pit, which is currently boarded-over, is constructed of cast concrete and does not have a drain. The condition of the concrete could not be ascertained.

Body Shop Exhaust Fan: According to Mr. Dolgin, automotive painting was performed in the western bay of 53 State Street building as part of the former auto repair and auto body operations the building formally hosted. Automotive paints have been known to contain VOCs, SVOCs, and heavy metals. The exhaust fan, associated with the former paint booth, was identified on the southern exterior wall of the building and may have contributed to the distribution of VOC, SVOC and metals impacts to exterior soils in its immediate vicinity.

Body Shop Drum Storage: During the January 9, 2013 Site walkover, Mr. Dolgin indicated that drums of waste material (paints, lacquers, used oil, etc.) from the body shop operations were formerly stored along the western exterior wall of the 53 State Street building. The contents of these drums were reportedly collected for disposal on a regular basis, but spills may have occurred during filling or collection.

Tannery / Grease Receiving Plant: A structure labeled "Grease Receiving Plant", located near the current footprint of the 53 State Street building, was associated with the St. Johnsbury Hide & Tallow Company. The Phase I ESA suggests that this facility was a tannery, although according to Mr. Dolgin the facility only stored hides for distribution and never processed the leather. Historically, tanneries utilized a number of hazardous chemicals, including liquids containing heavy metals, including hexavalent chromium. Even if this facility was primarily used for storage, it is possible that hazardous tannery-related materials were stored, and/or treated leather scraps were disposed of, at this facility.

Abandoned Electrical Panels: A number of abandoned electrical panels were noted along the northern boundary of the 64 State Street parcel. Based on a cursory inspection, the equipment on these panels appeared to be primarily circuit breakers, but other equipment may be present which may contain PCB oil and/or mercury switches.

Table 1 below summarizes the RECs described above. Table 1 also presents the potential contaminants of concern associated with each of these RECs and indicates if soil and/or groundwater may have been impacted by the contaminants of concern.

Table 1: Recognized Environmental Condition Summary

VT Salvage, St. Johnsbury, Vermont

Parcel	REC	VOCs	SVOCs	Metals	PCBs	Dioxins	Herbicides	Asbestos	Radionuclides
Site-Wide	Fires & Trash burning *		S			S			
	Radar Station Materials								S
	Salvage Yard Activities	S/GW	S/GW	S/GW	S/GW			S	
	Rail Road (Aerial Deposition) *		S						
0 Ely Street Lot 8	Abandoned ASTs/USTs	S/GW	S/GW	S/GW					
	55-Gallon Drums	S/GW	S/GW	S/GW	S/GW		S/GW		
	Computer Hardware *			S	S				
	Potentially impacted fill *	S/GW	S/GW	S/GW	S/GW			S	
	Car Crushing/Abandoned Cars	S/GW	S/GW	S/GW					

Table 1: Recognized Environmental Condition Summary

VT Salvage, St. Johnsbury, Vermont

Parcel	REC	VOCs	SVOCs	Metals	PCBs	Dioxins	Herbicides	Asbestos	Radionuclides
	Waste Oil/Used Oil Filters	S/GW	S/GW						
	Vermont Tool & Die Shavings	S	S		S				
	Rail Road Spur		S		S		S	S	
	Trailer Building Materials			B	B			B	
	Adjacent Hazardous Waste Sites	S/GW	S/GW						
0 Ely Street Lot 8.1	Fork & Hoe: Forge *		S	S		S			
	Fork & Hoe: Machine Shop	S/GW	S/GW		S/GW				
	Fork & Hoe: Painting *	S/GW	S/GW	S/GW	S/GW				
	Fork & Hoe: Oil Warehouse *	S/GW	S/GW	S/GW	S/GW				
	Fork & Hoe Building AST	S/GW	S/GW						
	Fork & Hoe Building Materials			B	B			B	
	Potentially impacted fill *	S/GW	S/GW	S/GW	S/GW			S	
	55-Gallon Drums	S/GW	S/GW	S/GW	S/GW		S/GW		
85 Ely Street	55-Gallon Drums	S/GW	S/GW	S/GW	S/GW		S/GW		
	Trailer Building Materials			B	B			B	
	Potentially impacted fill *	S/GW	S/GW	S/GW	S/GW			S	
53 State Street	UST	S/GW	S/GW						
	53 State St Building Materials			B	B			B	
	Waste Oil/Used Oil Filters		S/GW	S/GW					
	Motor Oil Release	S	S	S	S				
	Abandoned AST	S/GW	S/GW						
	Abandoned Cars	S/GW	S/GW						
	Floor Drains	S/GW	S/GW	S/GW	S				
	Automotive repair pit *	S/GW	S/GW	S/GW					
	Body Shop exhaust fan *	S	S	S					
	Body Shop Drum Storage *	S	S	S					
	St. Johnsbury Hide & Tallow			S/GW					
	Grease Receiving Plant	S/GW	S/GW	S/GW	S/GW				

Table 1: Recognized Environmental Condition Summary

VT Salvage, St. Johnsbury, Vermont

Parcel	REC	VOCs	SVOCs	Metals	PCBs	Dioxins	Herbicides	Asbestos	Radionuclides
64 State Street	ASTs	S/GW	S/GW						
	Abandoned Vehicles	S/GW	S/GW						
	Adjacent Hazardous Waste Sites	GW	GW						
	Rail Road Corridor *				S		S	S	
	Abandoned Electrical Panels *			S	S				
	Historical Lumber Yard *			S					

Notes

S - Soil potentially impacted by REC

GW - Groundwater potentially impacted by REC

B – Building materials may contain the contaminant and pose a risk

* - REC not included in the July 2012 Phase I ESA, or REC only mentioned in a very general manner

Form D
Project Objective/Description

The scope of work for this Phase II reconnaissance investigation was developed in accordance with the US EPA's Triad Approach[a] for streamlined brownfield site assessments and cleanups and is intended to gather sufficient data to allow for the development of a more efficient, cost effective analytical sampling effort.

Site Surface Inspection and Preliminary Soil Screening

Given the uncertainty of the exact location of potential waste materials and historical releases, the limited information available in the Phase I ESA, and the inability to visually inspect the surface conditions during the January 9, 2013 walkover due to snow cover, the efficient selection of the quantity and locations of proposed Phase II soil and groundwater sample points could not be performed. Therefore, a thorough Site surface inspection will be performed when there is no snow cover. In addition to gathering visual data to better understand surface conditions, The Johnson Company will conduct an extensive shallow soil field screening effort. This screening effort will assess surface soil of all RECs with known locations (auto body shop exhaust fan area, rail spur, drum storage area, oil release area, electric equipment storage area, etc.) as well as provide a general screening of site soils that do not have a location specific REC association. These screening results will be one of the tools used to locate where soil and groundwater samples should be collected for confirmatory laboratory analysis.

Hazardous Waste Inventory

Due to the large amount of potentially hazardous material on Site, and no currently-available information regarding actual quantity or types of residual contents, a subcontracted hazardous waste technician will be retained to quantify and profile the salvaged waste material into US Department of Transportation (USDOT) designated hazard material classes. The hazardous waste technician performing the inventory will survey and evaluate the contents, if any, in the many drums currently present at the Site. The technician will also collect samples of the drum contents for preliminary analysis. This preliminary analysis is expected to be sufficient to categorize the drum contents for disposal purposes; however additional analytical suites may be required depending on the type(s) of drum contents encountered. This profiling effort will focus on drums, former tanks, and liquid containing equipment, which have residual material and/or may have leaked since arriving on Site. A detailed inventory of hazardous materials will be generated. This quantification of potentially hazardous material is a necessary step to assess disposal options in anticipation of future corrective action planning. This inventory provides an additional tool to locate where additional soil and groundwater assessment (beyond that already known) is warranted.

---

[a] U.S. Environmental Protection Agency, *Using the Triad Approach to Streamline Brownfields Site Assessment and Cleanup*; Brownfields Technology Primer Series, EPA 542-B-03-002, June 2003.

Decommission UST

Based on information provided by the owner, The Johnson Company assumes the 500-gallon UST located outside the exterior wall of the 53 State Street building is abandoned. Considering this tank is positioned immediately adjacent to the building, underlying soil cannot be safely accessed without removal of this tank. In order to determine if a release from this UST has impacted subsurface soil or groundwater it must be first decommissioned in accordance with the Vermont DEC UST Closure and Site Assessment Requirements (Effective June 2010). Once the tank is removed, underlying soil will be inspected, field screened, and confirmatory samples collected to assess the likelihood of a release.

Floor Drain and Pit Inspection

During the January 9, 2013 site visit, a floor pit and four floor drains were identified in the 53 State Street building. The wooden cover on the pit will be removed to the extent necessary to allow access for inspection. The inspection of the pit will include assessing the presence of odors, staining, sheens, suspect building material, additional drains or outlets, and an estimation of volume of material present. Similarly, the cover on each drain will be removed and contents will be inspected. If material is present in the drains representative samples will be collected for field screening and laboratory analysis. In addition to the investigation and sample effort, the local sewer and water authority will be contacted to in an attempt confirm that the drains are connected to the municipal sewer, as was suggested by Mr. Dolgin.

Form E
Sampling Design

Preparation

Document Review - A critical first step will be to perform a detailed review of any additional documents and data that may be available pertaining to the Site, and communicate with EPA, VTDEC, SJBP, and other parties with knowledge of the Site to establish a more thorough understanding of Site conditions prior to preparing a definitive scope for the Phase II ESA. The goal of this task is to develop a comprehensive yet focused approach to the Phase II ESA efforts, and ensure that the work plan/SSQAPP and field investigation activities meet the expectations of VTDEC, EPA, property owner's representative and SJBP while collecting only necessary data.

Prepare Site Specific Safety and Health Plan (SAHP) - A Site-specific SAHP will be prepared for the proposed investigation activities.

Premark & Notify Digsafe – The area around the 53 State Street UST will be pre-marked and Digsafe authorization will be obtained prior to the initiation of intrusive sub-surface activities.

Field Screening Phase

Soil and pit/drain material analysis will be conducted in accordance with EPA methods identified in the following Table 1-1.

Table 1-1 Soil Analysis Methods
Vermont Salvage, Plainfield, VT

Analysis	Method
Volatile Organic Compounds (VOCs)	EPA Method 8260B
Semi-volatile Organic Compounds (SVOCs)	EPA Method 8270D
RCRA 8 Metals*	EPA Method 6020A
Polychlorinated Biphenyls (PCBs)	EPA Method 8082

*RCRA 8 metals are Arsenic (As), Barium (Ba), Cadmium (Cd), Chromium (Cu), Lead (Pb), Mercury (Hg), Selenium (Se), Silver (Ag)

The specific analytical suites selected for each task are detailed in the following sections. All samples will be submitted on ice under chain of custody protocol to Eastern Analytical Laboratories, Inc. (EAI) of Concord, NH.

Site Surface Inspection and Preliminary Soil Screening

Given the lack of data regarding the Site surface conditions, a thorough visual inspection will be performed after the snow has melted. In addition to gathering visual data to better understand surface conditions, The Johnson Company will conduct an extensive surface soil field screening effort that will involve collecting near surface (0-1 feet below ground surface) samples from at least 50 locations Site-wide. This screening effort will assess surface soil of all RECs with known locations (auto body shop exhaust fan area, rail spur, drum storage area, oil release area, electric equipment storage area, etc.) as well as provide a general screening of site soils that do not have a location specific REC affiliation. The soil and surrounding characteristics will be recorded, and all samples will be screened for volatile organic compounds (VOCs) using a field calibrated photoionization detector (PID) and metals using an X-ray fluorescence (XRF) device. Field screening of soils for VOCs with the PID will be conducted using the resealable bag headspace method. Soil samples will be placed into labeled ziplock bags, massaged to the extent required to break apart larger clumps of soil, and allowed to equilibrate in a warm environment (such as a heated truck cab) for approximately 10 minutes. Each soil sample to be screened will consistently follow the same procedure. Soil evaluation will consist of documenting soil characteristics (color, texture, moisture content, cohesiveness, anthropogenic fill, etc.), olfactory observations, origin, depth, and PID and XRF screening results. Prior to implementing the screening techniques proposed above, the soil surface will be screened for radioactivity using a Geiger counter and Geiger field screening results will be documented. Those areas exhibiting the most elevated radioactivity (if any) will be flagged for later radionuclide sampling. These screening results will be one of the tools used to locate where soil and groundwater samples should be collected for confirmatory laboratory analysis. These field-screening techniques will provide quantitative information, which will suggest the magnitude of a presence of a particular metal or general presence of VOCs. However, analyte specific concentrations that could be compared to VTDEC recognized screening standards will not be generated during the field effort portion of the reconnaissance phase. However, the screening data will provide an indication of where on Site, surface soils may have been adversely impacted by previous Site activity. During the Site walkover, Mr. Dolgin identified a section of land situated on far west end of the 0 Ely Street, Lot 8 parcel that may or may not be part of the 0 Ely Street, Lot 8 parcel. A 55-gallon drum, which reportedly contains used oil, was observed in this area. Staining on the drum was identified and the underlying soils may have been impacted. Because this drum may have been associated with the former salvage yard activities, the soil beneath the drum will be included in the field screening effort.

Hazardous Waste Inventory

A subcontracted hazardous waste technician will be retained to inventory and profile the salvaged waste material into US Department of Transportation (USDOT) designated hazard material classes. This profiling will be accomplished through the use of field test kits to assess the physical and chemical parameters of the drum contents (pH, flammability, sulfide content, reactivity, etc). The hazardous waste technician performing the inventory will assess and

evaluate the contents, if any, in the many drums/containers/carcasses of old equipment currently present at the Site. The technician will also collect samples of drum/container/equipment contents for PCBs via EPA Method 8082. Since these data will be used for disposal purposes only (i.e. satisfy the requirements of the receiving facility), duplicate and equipment blank samples will not be collected. These analyses are expected to be sufficient to categorize the drum contents for disposal purposes. The collection of 20 samples has been assumed for the preliminary analyses described above for the purposes of this proposal. We have also assumed that the drums can be readily and safely accessed to characterize their contents (i.e., they are not buried, partially buried, or located beneath other drums or debris). This profiling effort will focus on drums, former tanks, and liquid containing equipment, which have residual material and/or may have leaked since arriving on Site. A detailed inventory of hazardous materials will be generated. The hazardous waste inventory will occur concurrently with the Site surface inspection and preliminary soil screening effort described above. NOTE: The hazardous waste inventory will include an assessment of the leaking drum (which reportedly contains used oil) located on the disputed portion (west end) of the 0 Ely Street Lot 8 parcel (See Figure 2).

Decommission UST

In order to access and assess underlying soils, the reportedly abandoned UST immediately adjacent to the 53 State Street building will be removed and decommissioned. Prior to removing the UST any liquid remaining in the tank will be containerized and disposed of appropriately. The soil surrounding the tank will be carefully removed with an excavator to expose the tank. At a minimum, soil screening samples will be collected from the vicinity of the fill port, all four sidewalls, and two locations at the base of the excavation for PID screening. If any soil registers PID readings above background levels or is visibly impacted with fuel oil, the impacted soil will either remain in the excavation or be poly-encapsulated (if registered PID values are 10 ppm greater than background). The two screening samples demonstrating the most elevated PID readings will be collected for laboratory analysis of VOCs, SVOCs, and RCRA-8 metals (Arsenic, Barium, Cadmium, Chromium, Lead, Mercury, Selenium, and Silver). If no elevated PID responses are encountered and if no visual or olfactory evidence of contamination is observed, then both analytical samples will be collected from the base of the excavation (the base of the excavation is the most likely to have been impacted by a release). Following removal, the tank will carefully be inspected for pinholes and other potential signs of leakage, and cut open for cleaning. The tank carcass will be inerted and transported off-Site for recycling. As required by the Vermont DEC UST Closure and Site Assessment Requirements (Effective June 2010), the Vermont UST Program will be notified of the proposed tank closure at least 5 days prior to the scheduled decommissioning effort and submittal of a UST Closure Report will be prepared within 72 hours after completion of the activity.

Floor Drain and Pit Inspection

As described above in Form D, a floor pit and four floor drains were identified in the 53 State Street building. The wooden cover on the pit will be removed to the extent necessary to allow access for inspection. The inspection of the pit will include assessing the presence of odors, staining, sheens, suspect building material, additional drains or outlets, and an estimation of volume of material present. Similarly, the cover on each drain will be removed and contents will be inspected. If present, a sample of soil or sediment will be collected from each floor drain and the pit for field screening and laboratory analysis. It is assumed that a total of four drain material samples and one pit sample (five samples total) will be collected and sent for laboratory analysis of VOCs, SVOCs, metals, and PCBs. In addition to collecting samples, effort will be made to contact the local sewer and water authority in an attempt to confirm the drains are connected to the municipal sewer, as was reported by Mr. Dolgin.

Survey & Mapping

Assuming satellite coverage is favorable; coordinates for each exterior sample location will be collected using a sub-meter Trimble GPS unit. If satellite coverage is inadequate or if a particular sample is located within the building, measurements will be collected from fixed features such as slab corners, manholes, utility poles or other site features with established coordinates. This survey data will be used to place the sample locations on Property maps.

Project Timeline

Table 1-2 provides a summary of the anticipated timeline for this project.

Table 1-2 Project Timeline
VT Salvage, St. Johnsbury Vermont

Activity	Time Frame
PREPARATORY TASKS	
EPA and VTDEC QAPP Approval (assumes minimal revisions and 4 weeks of regulatory review for initial QAPP)	Allow 4 weeks
Prepare SAHP, Document Review, & Digsafe Pre-Mark	3 days
INVESTIGATION	
Site Surface Inspection & Preliminary Screening Effort	3 days
Hazardous Waste Inventory	
UST Closure	1 day
Pit & Floor Drain Inspection	
REPORTING	
The results of this investigation will be included in a comprehensive report covering this investigation and the subsequent Phase II ESA	NA

The Project timeline presented above assumes that certain tasks will be performed

concurrently.

JCO is not responsible for delays due to: sub-contractor availability, weather, access, regulatory review and approval, archeological findings, historic preservation concerns, owner review of information/reports, or other unforeseen circumstances.

Quality Assurance / Quality Control

All sample collection equipment either will be decontaminated with Alconox and deionized water or will be dedicated to the collection of a single sample (clean nitrile gloves or VOC syringes).

The quality control and quality assurance (QA/QC) sampling will include duplicate samples (1 collected for every 20-parent samples) of each analytical suite for soil samples. An equipment blank for each analytical suite will be collected for each field mobilization effort and samples to be analyzed for VOCs will be accompanied by laboratory prepared trip blank. Additionally, all coolers containing samples will be shipped with a laboratory prepared temperature blank. All samples will be packed in an ice-chilled cooler for delivery to EAI under chain of custody protocol.

Reporting

The investigation described in this SSQAPP is intended to be the first phase in a two-phase ESA; the results of this investigation and the results of the subsequent laboratory sample collection phase will be combined into one comprehensive report; the only formal report prepared specifically in connection with this investigation will be the UST closure report. The SSQAPP for the second phase of the investigation, will discuss the results of the proposed reconnaissance phase in manner justifying proposed sample locations for future laboratory analysis.

Following completion of both phases of on-site investigation work and receipt of all analytical data, a detailed report describing the results of the investigations will be prepared. Included in this report will be summaries of sample collection activities, results of field screening, result summary tables, laboratory analysis reports, Property and area maps, sample collection forms, and field notes. Data will be presented in tabular, graphical, and text forms. The report will contain conclusions regarding the nature and extent of contamination at the Property, as well as recommendations for further investigation if warranted. Copies of the DRAFT report will be provided to the Property owner (Vermont Salvage Holdings, LLC), the St. Johnsbury Brownfields Program, the EPA, and VTDEC for review. Following this review, all comments will be addressed and a final report will be prepared.

Form F-2
Sampling and Analytical Methods Requirements

Task	Matrix (# of samples)	Parameter	Number of Samples (include field QC)	Analytical Method	Sampling SOP	Containers per Sample (number, size and type)	Preservation Requirements (temperature, light, chemical)	Maximum Holding Time
Metals Screening	**Soil (>50)**	XRF - Field Screening	**>50 samples**	EPA 6200	7c, 15c	N/A	N/A	Performed in field
VOC Screening	**Soil (>50)**	PID – Field Screening	**>50 samples**	NA	7c, 15c	Quart Ziplock	~10 minutes in warm environment to equilibrate	Performed in field
UST Closure	Soil (2)	VOCs-laboratory	2 samples + 1 dup + 1 equip + 1 trip	EPA 8260B	7c	20 mL preweighed MEOH glass vial, 5 mL syringe (sample collected in syringe is unpreserved for percent moisture determination)	4° C ± 2° C, 5 ml methanol: 5 gram soil	14 days
	Soil (2)	SVOCs – Laboratory	2 samples + 1 dup + 1 equip	EPA 8270D SIM	7c	4 oz amber glass jar	4° C ± 2° C	14 days
	Soil (2)	RCRA 8 Metals - Laboratory	2 samples + 1 dup + 1 equip	EPA 6020A	7c	4 oz clear glass	None	180 days; 28 days for mercury
Hazardous Waste Inventory	Drum Contents (20)	PCBs 8082– Laboratory	20 samples	EPA 8082 with Soxhlet extraction (21b & 22b- See RFA 07285 August 2008 Update)	7c	250 mL widemouth glass jar with Teflon-lined lid	4° C ± 2° C	Extract within 14 days, analyze within 40 days
	Drum Contents (20)	DOT Characterization Kit	20 samples	NA	NA	NA	NA	Performed in field

Task	Matrix (# of samples)	Parameter	Number of Samples (include field QC)	Analytical Method	Sampling SOP	Containers per Sample (number, size and type)	Preservation Requirements (temperature, light, chemical)	Maximum Holding Time
Floor Drain & Pit Sampling	Drain/Pit Contents (5)	VOCs-laboratory	5 samples	EPA 8260B	7c	20 mL preweighed MEOH glass vial, 5 mL syringe (sample collected in syringe is unpreserved for percent moisture determination)	4° C ± 2° C, 5 ml methanol: 5 gram soil	14 days
	Drain/Pit Contents (5)	SVOCs – Laboratory	5 samples	EPA 8270D SIM	7c	4 oz amber glass jar	4° C ± 2° C	14 days
	Drain/Pit Contents (5)	RCRA 8 Metals - Laboratory	5 samples	EPA 6020A	7c	4 oz clear glass	None	180 days; 28 days for mercury
Floor Drain & Pit Sampling	Drain/Pit Contents (5)	PCBs 8082– Laboratory	5 samples + 1 dup + 1 equip	EPA 8082 with Soxhlet extraction (21b & 22b- See RFA 07285 August 2008 Update)	7c	250 mL widemouth glass jar with Teflon-lined lid	4° C ± 2° C	Extract within 14 days, analyze within 40 days

Form G
Method and SOP Reference Table

Project Analytical Standard Operating Procedures (SOPs): Includes document title, date, revision number, and originator's name	
No.	**Analytical SOP Name**
1b	EAI SOP: QA45608_5 Standard Operating Procedure Pesticide/PCB Analysis EPA Method 608 and SW 846 Methods 8081A and 8082, 3/05, Rev 5, Eastern Analytical, Inc.
2b	EAI SOP: QA45002_01 Methods 8081A and 8082 Solid Sample Extraction by Soxhlet EPA Method 3540C, 01/07/04, Rev 3, Eastern Analytical, Inc.
3b	EAI SOP: QA292004_6020_6020A Standard Operating Procedure Inductively Coupled Plasma-Mass Spectrometry, 2/25/05, Rev 4, Eastern Analytical, Inc.
5b	EAI SOP: QA41500_08 Standard Operating Procedure Semivolatile Organic Analytes by Gas Chromatography/Mass Spectrometry, 01/01/05, Rev 8, Eastern Analytical, Inc.
7b	EAI SOP: QA580008 Standard Operating Procedure Volatile Organic Compounds by Gas Chromatography/ Mass Spectrometry, 3/31/07, Rev 8, Eastern Analytical, Inc.

Project Sampling SOPs*: Includes document title, date, revision number, and originator's name	
No.	**Sampling SOP Name**
1c	SOP-JCO-001 Standard Operating Procedure for Soil Characterization Study, 12/05, Rev 2, The Johnson Company, Inc.
3c	SOP-JCO-007 Standard Operating Procedure for Chain-of-Custody Records, 3/96, Rev 4, The Johnson Company, Inc.
5c	SOP-JCO-018 Standard Operating Procedure for Deviation from Protocols or Standard Operating Procedures and for Notation, Correction, and Documentation of Unforeseen Circumstances, 7/94, Rev. 1, The Johnson Company, Inc.
6c	SOP-JCO-021 Standard Operating Procedures for Soil Sampling for Volatile Organic Compounds, 01/04, Rev 3, The Johnson Company, Inc.
7c	SOP-JCO-026 Standard Operating Procedure for Soil, Sediment, and Sludge Sampling and Analysis for Semi-Volatile Organic and Inorganic Components, 7/94, Rev 2, The Johnson Company, Inc.
8c	SOP-JCO-027 Standard Operating Procedure for Decontamination of Field Equipment, 3/96, Rev 3, The Johnson Company, Inc.
9c	SOP-JCO-034 Standard Operating Procedure for Use of Field Log Books, 3/96, Rev 2, The Johnson Company, Inc.
10c	SOP-JCO-036 Standard Operating Procedure for Geologic Description of Sediments, 12/99, Rev 1, The Johnson Company, Inc.
12c	SOP-JCO-041 Standard Operating Procedure for Calibration and Operation of the Thermal Environmental Instruments, Inc. Model 580B OVM® Photo-Ionization Detector, 03/97, Rev 2, The Johnson Company, Inc.
15c	SOP-JCO-058 Standard Operating Procedure for use of Innov-X Hand-Held X-Ray Fluorescence (XRF) Sampling Device, 6/03, Rev 0, The Johnson Company, Inc.
20c	SOP-JCO-066 Standard Operating Procedure for Sediment and Sludge Sampling Using a Trowel, Shovel or Ekman Dredge Sampler, 06/07, Rev. 1, The Johnson Company, Inc.

Form K
Analytical Sensitivity and Project Criteria Tables

As of the date of this site-specific QAPP addendum, the current state and/or federal standards have been incorporated into this table and the reporting limits and standards have been reviewed for accuracy. The applicable standards included in Form K are the November 2012 EPA Industrial and Residential Regional Screening Levels (RSLs) and the VT Department of Health Soil Screening Values (SSVs) presented in the April 5, 2012 IROCP.

Form K						
Analytical Sensitivity and Project Criteria						
Analyte	**Analytical Method**	**Detection Limit (Units)**	**Reporting Limit (units)**	**Precision Difference (%)**	**Accuracy Limit (%)**	**Action Limit (Industrial/Residential) (units)**
01: Laboratory 13 PP Metals (Soil): SOP 3b (Eastern Analytical)						
Arsenic	6020A	---	0.5 (mg/kg)	20	80-120	1.6 / 0.39 (mg/kg)
Barium	6020A	---	0.5 (mg/kg)	20	80-120	190,000 / 15,000 (mg/kg)
Cadmium	6020A	---	0.5 (mg/kg)	20	80-120	800 / 70 (mg/kg) VDH: 34.5 mg/kg
Chromium Total	6020A	---	0.5 (mg/kg)	20	80-120	
Chromium VI	---	---	---	---	---	5.6 / 0.29 (mg/kg) VDH: 103 mg/kg
Lead	6020A	---	0.5 (mg/kg)	20	80-120	800 / 400 (mg/kg)
Mercury	6020A	---	0.1 (mg/kg)	20	80-120	43 / 10 (mg/kg)
Selenium	6020A	---	0.5 (mg/kg)	20	80-120	5,100 / 390 (mg/kg)
Silver	6020A	---	0.5 (mg/kg)	20	80-120	5,100 / 390 (mg/kg)
Analyte	**Analytical Method**	**Detection Limit (Units)**	**Reporting Limit (units)**	**Precision Difference (%)**	**Accuracy Limit (%)**	**Action Limit (Industrial/Residential) (units)**
02: Laboratory SVOC Analysis (Soil): SOP 5b (Eastern Analytical)						
Phenol	8270D	---	0.07 (mg/kg)	30	30-130	180,000 / 18,000 (mg/kg)
2-Chlorophenol	8270D	---	0.07 (mg/kg)	30	30-130	5,100 / 390 (mg/kg)
2,4-Dichlorophenol	8270D	---	0.07 (mg/kg)	30	30-130	1,800 / 180 (mg/kg)
2,4,5-Trichlorophenol	8270D	---	0.07 (mg/kg)	30	30-130	62,000 / 6,100 (mg/kg)
2,4,6-Trichlorophenol	8270D	---	0.07 (mg/kg)	30	30-130	160 / 44 (mg/kg)
Pentachlorophenol	8270D	---	0.3 (mg/kg)	30	30-130	2.7 / 0.89 (mg/kg)
2-Nitrophenol	8270D	---	0.07 (mg/kg)	30	30-130	
4-Nitrophenol	8270D	---	0.3 (mg/kg)	30	30-130	
2,4-Dinitrophenol	8270D	---	0.3 (mg/kg)	30	30-130	1,200 / 120 (mg/kg)
2-Methylphenol (o-Cresol)	8270D	---	0.07 (mg/kg)	30	30-130	31,000 / 3,100 (mg/kg)
3/4-Methylphenol (m/p-Cresol)	8270D	---	0.07 (mg/kg)	30	30-130	(31,000/62,000)) (mg/kg)
2,4-Dimethylphenol	8270D	---	0.07 (mg/kg)	30	30-130	12,000 / 1,200 (mg/kg)
4-Chloro-3-methylphenol	8270D	---	0.07 (mg/kg)	30	30-130	62,000 / 6,100 (mg/kg)
4,6-Dinitro-2-methylphenol	8270D	---	0.3 (mg/kg)	30	30-130	49 / 4.9 (mg/kg)
Benzoic Acid	8270D	---	3 (mg/kg)	30	15-140	2,500,000 / 240,000 (mg/kg)
N-Nitrosodimethylamine	8270D	---	0.07 (mg/kg)	30	40-140	0.034 / 0.0023 (mg/kg)
N-Nitroso-di-n-propylamine	8270D	---	0.07 (mg/kg)	30	40-140	0.25 / 0.069 (mg/kg)
N-nitrosodiphenylamine	8270D	---	0.07 (mg/kg)	30	40-140	350 / 99 (mg/kg)
bis (2-Chloroethyl) Ether	8270D	---	0.07 (mg/kg)	30	40-140	1 / 0.21 (mg/kg)
bis (2-Chloroethoxy) methane	8270D	---	0.07 (mg/kg)	30	40-140	1,800 / 180 (mg/kg)
m- or 1,3-Dichlorobenzene	8270D	---	0.07 (mg/kg)	30	40-140	
p- or 1,4-Dichlorobenzene	8270D	---	0.07 (mg/kg)	30	40-140	12 / 2.4 (mg/kg)
o- or 1,2-Dichlorobenzene	8270D	---	0.07 (mg/kg)	30	40-140	9,800 / 1,900 (mg/kg)
1,2,4-Trichlorobenzene	8270D	---	0.07 (mg/kg)	30	40-140	99 / 22 (mg/kg)
beta or 2-Chloronaphthalene	8270D	---	0.07 (mg/kg)	30	40-140	82,000 / 6,300 (mg/kg)
4-Chlorophenyl-phenylether	8270D	---	0.07 (mg/kg)	30	40-140	

Form K						
Analytical Sensitivity and Project Criteria						
Analyte	Analytical Method	Detection Limit (Units)	Reporting Limit (units)	Precision Difference (%)	Accuracy Limit (%)	Action Limit (Industrial/Residential) (units)
4-Bromophenyl-phenylether	8270D	---	0.07 (mg/kg)	30	40-140	
Hexachloroethane	8270D	---	0.07 (mg/kg)	30	40-140	43 / 12 (mg/kg)
Hexachlorobutadiene	8270D	---	0.07 (mg/kg)	30	40-140	22 / 6.2 (mg/kg)
Hexachlorocyclopentadiene	8270D	---	0.3 (mg/kg)	30	40-140	3,700 / 370 (mg/kg)
Hexachlorobenzene	8270D	---	0.07 (mg/kg)	30	40-140	1.1 / 0.3 (mg/kg)
4-Chloroaniline	8270D	---	0.07 (mg/kg)	30	40-140	8.6 / 2.4 (mg/kg)
2-Nitroaniline	8270D	---	0.3 (mg/kg)	30	40-140	6,000 / 610 (mg/kg)
3-Nitroaniline	8270D	---	0.07 (mg/kg)	30	40-140	
4-Nitroaniline	8270D	---	0.07 (mg/kg)	30	40-140	86 / 24 (mg/kg)
Benzyl Alcohol	8270D	---	0.3 (mg/kg)	30	40-140	62,000 / 6,100 (mg/kg)
Nitrobenzene	8270D	---	0.07 (mg/kg)	30	40-140	24 / 4.8 (mg/kg)
Isophorone	8270D	---	0.07 (mg/kg)	30	40-140	1,800 / 510 (mg/kg)
2,4-Dinitrotoluene	8270D	---	0.07 (mg/kg)	30	40-140	5.5 / 1.6 (mg/kg)
2,6-Dinitrotoluene	8270D	---	0.07 (mg/kg)	30	40-140	620 / 61 (mg/kg)
Benzidine	8270D	---	0.3 (mg/kg)	30	40-140	0.0075 / 0.0005 (mg/kg)
3,3'-Dichlorobenzidine	8270D	---	0.07 (mg/kg)	30	40-140	3.8 / 1.1 (mg/kg)
Pyridine	8270D	---	0.3 (mg/kg)	30	40-140	1,000 / 78 (mg/kg)
Azobenzene	8270D	---	0.07 (mg/kg)	30	40-140	23 / 5.1 (mg/kg)
Carbazole	8270D	---	0.07 (mg/kg)	30	40-140	
Dimethylphthalate	8270D	---	0.07 (mg/kg)	30	40-140	
Diethylphthalate	8270D	---	0.3 (mg/kg)	30	40-140	490,000 / 49,000 (mg/kg)
Di-n-butylphthalate	8270D	---	0.3 (mg/kg)	30	40-140	62,000 / 6,100 (mg/kg)
Butylbenzylphthalate	8270D	---	0.07 (mg/kg)	30	40-140	910 / 260 (mg/kg)
bis(2-Ethylhexyl)phthalate	8270D	---	0.3 (mg/kg)	30	40-140	120 / 35 (mg/kg) VDH: 19.2 mg/kg
Di-n-octylphthalate	8270D	---	0.07 (mg/kg)	30	40-140	
Dibenzofuran	8270D	---	0.07 (mg/kg)	30	40-140	1,000 / 78 (mg/kg)
Naphthalene	8270D SIM	---	0.007 (mg/kg)	30	40-140	18 / 3.6 (mg/kg) VDH: 1,070 mg/kg
2-Methylnaphthalene	8270D SIM	---	0.007 (mg/kg)	30	40-140	2,200 / 230 (mg/kg)
Acenaphthylene	8270D SIM	---	0.007 (mg/kg)	30	40-140	
Acenaphthene	8270D SIM	---	0.007 (mg/kg)	30	40-140	33,000 / 3,400 (mg/kg)
Fluorene	8270D SIM	---	0.007 (mg/kg)	30	40-140	22,000 / 2,300 (mg/kg)
Phenanthrene	8270D SIM	---	0.007 (mg/kg)	30	40-140	
Anthracene	8270D SIM	---	0.007 (mg/kg)	30	40-140	170,000 / 17,000 (mg/kg)
Fluoranthene	8270D SIM	---	0.007 (mg/kg)	30	40-140	22,000 / 2,300 (mg/kg)
Pyrene	8270D SIM	---	0.007 (mg/kg)	30	40-140	17,000 / 1,700 (mg/kg)
Benzo(a)anthracene	8270D SIM	---	0.007 (mg/kg)	30	40-140	2.1 / 0.15 (mg/kg)
Chrysene	8270D SIM	---	0.007 (mg/kg)	30	40-140	210 / 15 (mg/kg)
Benzo(b)fluoranthene	8270D SIM	---	0.007 (mg/kg)	30	40-140	2.1 / 0.15 (mg/kg)
Benzo(k)fluoranthene	8270D SIM	---	0.007 (mg/kg)	30	40-140	21 / 1.5 (mg/kg)
Benzo(a)pyrene	8270D SIM	---	0.007 (mg/kg)	30	40-140	0.21 / 0.015 (mg/kg) VDH: 0.01 mg/kg
Indeno(1,2,3-c,d)pyrene	8270D SIM	---	0.007 (mg/kg)	30	40-140	2.1 / 0.15 (mg/kg)
Dibenzo(a,h)anthracene	8270D SIM	---	0.007 (mg/kg)	30	40-140	0.21 / 0.015 (mg/kg)
Benzo(g,h,i)perylene	8270D SIM	---	0.007 (mg/kg)	30	40-140	

Form K						
Analytical Sensitivity and Project Criteria						
Analyte	**Analytical Method**	**Detection Limit (Units)**	**Reporting Limit (units)**	**Precision Difference (%)**	**Accuracy Limit (%)**	**Action Limit (Industrial/Residential) (units)**
03: Laboratory PCB Analysis (Soil): SOP 1b (Eastern Analytical) // SOP 29b (Katahdin) // SOP 21b (Phoenix)						
Total PCBs	---	---	---	---	---	--- / --- (mg/kg) VDH: 0.12 mg/kg
Aroclor-1016	8082	---	0.02 (mg/kg)	30	40-140	21 / 3.9 (mg/kg)
Aroclor-1221	8082	---	0.02 (mg/kg)	---	---	0.54 / 0.14 (mg/kg)
Aroclor-1232	8082	---	0.02 (mg/kg)	---	---	0.54 / 0.14 (mg/kg)
Aroclor-1242	8082	---	0.02 (mg/kg)	---	---	0.74 / 0.22 (mg/kg)
Aroclor-1248	8082	---	0.02 (mg/kg)	---	---	0.74 / 0.22 (mg/kg)
Aroclor-1254	8082	---	0.02 (mg/kg)	---	---	0.74 / 0.22 (mg/kg)
Aroclor-1260	8082	---	0.02 (mg/kg)	30	40-140	0.74 / 0.22 (mg/kg)
Analyte	**Analytical Method**	**Detection Limit (Units)**	**Reporting Limit (units)**	**Precision Difference (%)**	**Accuracy Limit (%)**	**Action Limit (Industrial/Residential) (units)**
04: Laboratory VOC Analysis (Soil): SOP 7b (Eastern Analytical)						
Dichlorodifluoromethane	8260B	---	0.1 (mg/kg)	---	---	400 / 94 (mg/kg)
Chloromethane (Methyl chloride)	8260B	---	0.1 (mg/kg)	---	---	500 / 120 (mg/kg)
Vinyl chloride	8260B	---	0.1 (mg/kg)	---	---	1.7 / 0.06 (mg/kg)
Bromomethane	8260B	---	0.1 (mg/kg)	---	---	32 / 7.3 (mg/kg)
Chloroethane	8260B	---	0.1 (mg/kg)	---	---	61,000 / 15,000 (mg/kg)
Trichlorofluoromethane	8260B	---	0.1 (mg/kg)	---	---	3,400 / 790 (mg/kg)
Diethyl ether (Ethyl ether)	8260B	---	0.05 (mg/kg)	---	---	200,000 / 16,000 (mg/kg)
Acetone	8260B	---	2 (mg/kg)	---	---	630,000 / 61,000 (mg/kg)
Benzene	8260B	---	0.05 (mg/kg)	20	66-142	5.4 / 1.1 (mg/kg) VDH: 6.24 mg/kg
1,1-Dichloroethene	8260B	---	0.05 (mg/kg)	20	59-172	1,100 / 240 (mg/kg)
Methylene chloride	8260B	---	0.1 (mg/kg)	---	---	53 / 11 (mg/kg)
Carbon disulfide	8260B	---	0.1 (mg/kg)	---	---	3,700 / 820 (mg/kg)
Methyl tert-butyl ether (MTBE)	8260B	---	0.1 (mg/kg)	---	---	220 / 43 (mg/kg)
trans-1,2-Dichloroethene	8260B	---	0.05 (mg/kg)	---	---	690 / 150 (mg/kg) VDH: 135 mg/kg
1,1-Dichloroethane	8260B	---	0.05 (mg/kg)	---	---	17 / 3.3 (mg/kg)
2,2-Dichloropropane	8260B	---	0.05 (mg/kg)	---	---	
cis-1,2-Dichloroethene	8260B	---	0.05 (mg/kg)	---	---	2,000 / 160 (mg/kg) VDH: 673 mg/kg
2-Butanone (MEK)	8260B	---	0.5 (mg/kg)	---	---	200,000 / 28,000 (mg/kg) VDH: 40,400 mg/kg
Bromochloromethane	8260B	---	0.05 (mg/kg)	---	---	680 / 160 (mg/kg)
Tetrahydrofuran (THF)	8260B	---	0.5 (mg/kg)	---	---	
Chloroform	8260B	---	0.05 (mg/kg)	---	---	1.5 / 0.29 (mg/kg)
1,1,1-Trichloroethane	8260B	---	0.05 (mg/kg)	---	---	38,000 / 8,700 (mg/kg)
Carbon tetrachloride	8260B	---	0.05 (mg/kg)	---	---	3 / 0.61 (mg/kg)
1,1-Dichloropropene	8260B	---	0.05 (mg/kg)	---	---	
1,2-Dichloroethane	8260B	---	0.05 (mg/kg)	---	---	2.2 / 0.43 (mg/kg)
Trichloroethene	8260B	---	0.05 (mg/kg)	20	62-137	6.4 / 0.91 (mg/kg) VDH: 0.86 mg/kg
1,2-Dichloropropane	8260B	---	0.05 (mg/kg)	---	---	4.7 / 0.94 (mg/kg)
Dibromomethane (Methylene bromide)	8260B	---	0.05 (mg/kg)	---	---	110 / 25 (mg/kg)
Bromodichloromethane	8260B	---	0.05 (mg/kg)	---	---	1.4 / 0.27 (mg/kg)
4-Methyl-2-pentanone (MIBK)	8260B	---	0.5 (mg/kg)	---	---	53,000 / 5,300 (mg/kg)
cis-1,3-Dichloropropene	8260B	---	0.05 (mg/kg)	---	---	
Toluene	8260B	---	0.05 (mg/kg)	20	59-139	45,000 / 5,000 (mg/kg)

Form K						
Analytical Sensitivity and Project Criteria						
Analyte	Analytical Method	Detection Limit (Units)	Reporting Limit (units)	Precision Difference (%)	Accuracy Limit (%)	Action Limit (Industrial/Residential) (units)
trans-1,3-Dichloropropene	8260B	---	0.05 (mg/kg)	---	---	
1,1,2-Trichloroethane	8260B	---	0.05 (mg/kg)	---	---	5.3 / 1.1 (mg/kg)
Methyl Butyl Ketone (2-Hexanone)	8260B	---	0.1 (mg/kg)	---	---	1,400 / 210 (mg/kg)
Tetrachloroethene	8260B	---	0.05 (mg/kg)	---	---	110 / 22 (mg/kg) VDH: 0.8 mg/kg
1,3-Dichloropropane	8260B	---	0.05 (mg/kg)	---	---	20,000 / 1,600 (mg/kg)
Dibromochloromethane	8260B	---	0.05 (mg/kg)	---	---	3.3 / 0.68 (mg/kg)
1,2-Dibromoethane (EDB)	8260B	---	0.05 (mg/kg)	---	---	0.17 / 0.034 (mg/kg)
Chlorobenzene	8260B	---	0.05 (mg/kg)	20	60-133	1,400 / 290 (mg/kg)
1,1,1,2-Tetrachloroethane	8260B	---	0.05 (mg/kg)	---	---	9.3 / 1.9 (mg/kg)
Ethylbenzene	8260B	---	0.05 (mg/kg)	---	---	27 / 5.4 (mg/kg)
o-Xylene	8260B	---	0.05 (mg/kg)	---	---	3,000 / 690 (mg/kg)
m,p-Xylene	8260B	---	0.05 (mg/kg)	---	---	
Styrene	8260B	---	0.05 (mg/kg)	---	---	36,000 / 6,300 (mg/kg)
Bromoform	8260B	---	0.05 (mg/kg)	---	---	220 / 62 (mg/kg)
IsoPropylbenzene (Cumene)	8260B	---	0.05 (mg/kg)	---	---	11,000 / 2,100 (mg/kg)
Bromobenzene	8260B	---	0.05 (mg/kg)	---	---	1,800 / 300 (mg/kg)
1,1,2,2-Tetrachloroethane	8260B	---	0.05 (mg/kg)	---	---	2.8 / 0.56 (mg/kg)
1,2,3-Trichloropropane	8260B	---	0.05 (mg/kg)	---	---	0.095 / 0.005 (mg/kg)
n-Propylbenzene	8260B	---	0.05 (mg/kg)	---	---	21,000 / 3,400 (mg/kg)
o- or 2-Chlorotoluene	8260B	---	0.05 (mg/kg)	---	---	20,000 / 1,600 (mg/kg)
p- or 4-Chlorotoluene	8260B	---	0.05 (mg/kg)	---	---	20,000 / 1,600 (mg/kg)
1,3,5-Trimethylbenzene	8260B	---	0.05 (mg/kg)	---	---	10,000 / 780 (mg/kg)
tert-Butylbenzene	8260B	---	0.05 (mg/kg)	---	---	
1,2,4-Trimethylbenzene	8260B	---	0.05 (mg/kg)	---	---	260 / 62 (mg/kg)
sec-Butylbenzene	8260B	---	0.05 (mg/kg)	---	---	
m- or 1,3-Dichlorobenzene	8260B	---	0.05 (mg/kg)	---	---	
p- or 4-Isopropyltoluene	8260B	---	0.05 (mg/kg)	---	---	
p- or 1,4-Dichlorobenzene	8260B	---	0.05 (mg/kg)	---	---	12 / 2.4 (mg/kg)
o- or 1,2-Dichlorobenzene	8260B	---	0.05 (mg/kg)	---	---	9,800 / 1,900 (mg/kg)
n-Butylbenzene	8260B	---	0.05 (mg/kg)	---	---	51,000 / 3,900 (mg/kg)
1,2-Dibromo-3-Chloropropane (Dibromochloropropane)	8260B	---	0.05 (mg/kg)	---	---	0.069 / 0.0054 (mg/kg)
1,2,4-Trichlorobenzene	8260B	---	0.05 (mg/kg)	---	---	99 / 22 (mg/kg)
Hexachlorobutadiene	8260B	---	0.05 (mg/kg)	---	---	22 / 6.2 (mg/kg)
Naphthalene	8260B	---	0.1 (mg/kg)	---	---	18 / 3.6 (mg/kg) VDH: 1,070 mg/kg
1,2,3-Trichlorobenzene	8260B	---	0.05 (mg/kg)	---	---	490 / 49 (mg/kg)

Figures

Figure 1 - Site Location Map.mxd

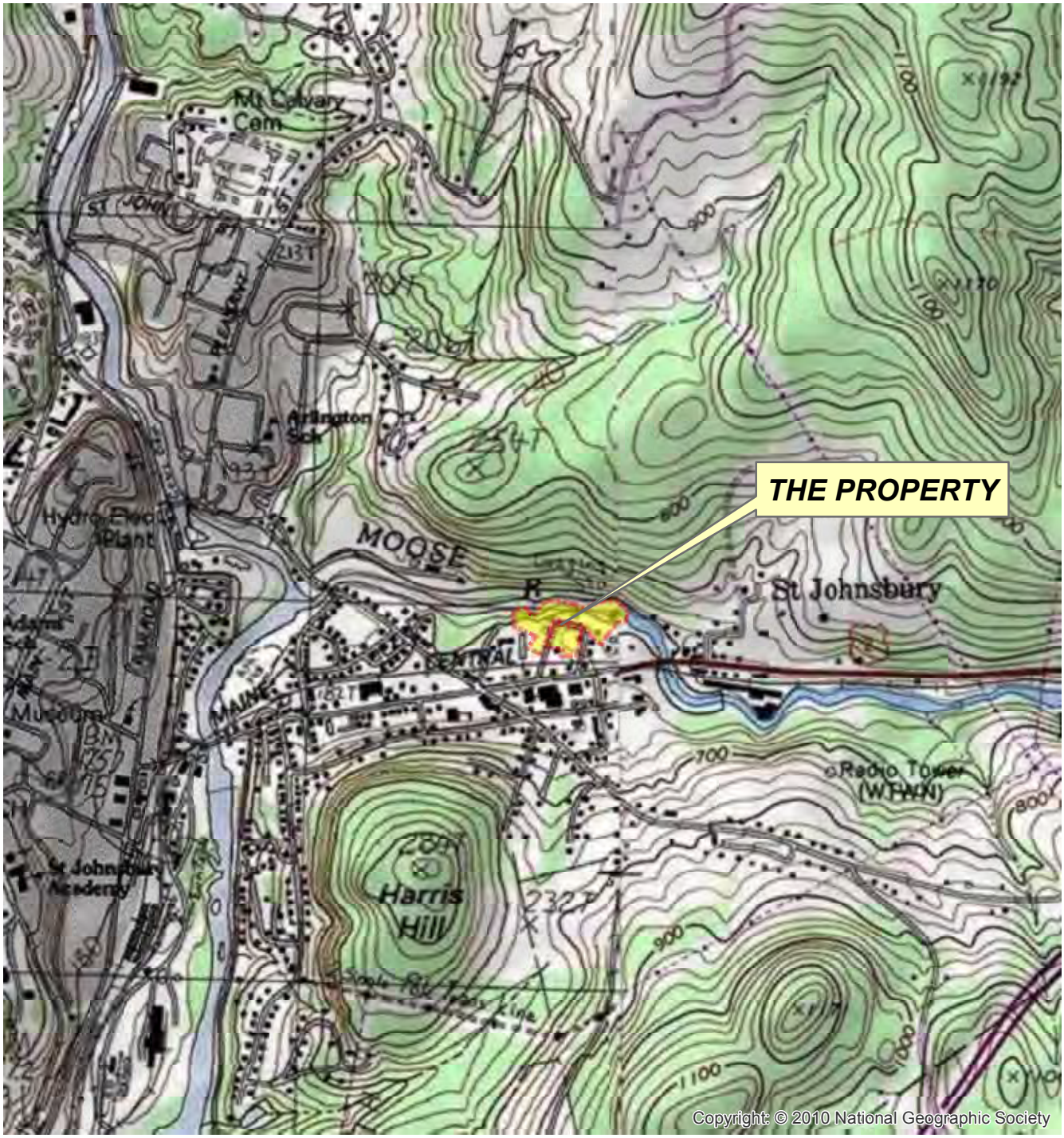

N

0.5 0.25 0 0.5

MILES

500 0 500 1,000 1,500 2,000 2,500 3,000 3,500

FEET

CONTOUR INTERVAL: 20 FEET

VT

MAP LOCATION

BASE MAP: USGS Seamless iTopo 1:24,000, December 12, 2009

FIGURE 1: SITE LOCATION MAP
VT SALVAGE
ST. JOHNSBURY, VERMONT

The Johnson Company

100 State Street, Suite 600
Montpelier, VT 05602

Drawn by: JEM	Date: 2/25/13
Chk'd by: JKM	Date: 3/5/13
App'd by: JKM	Date: 3/5/13
Scale: As Shown	Project: 3-1946-1

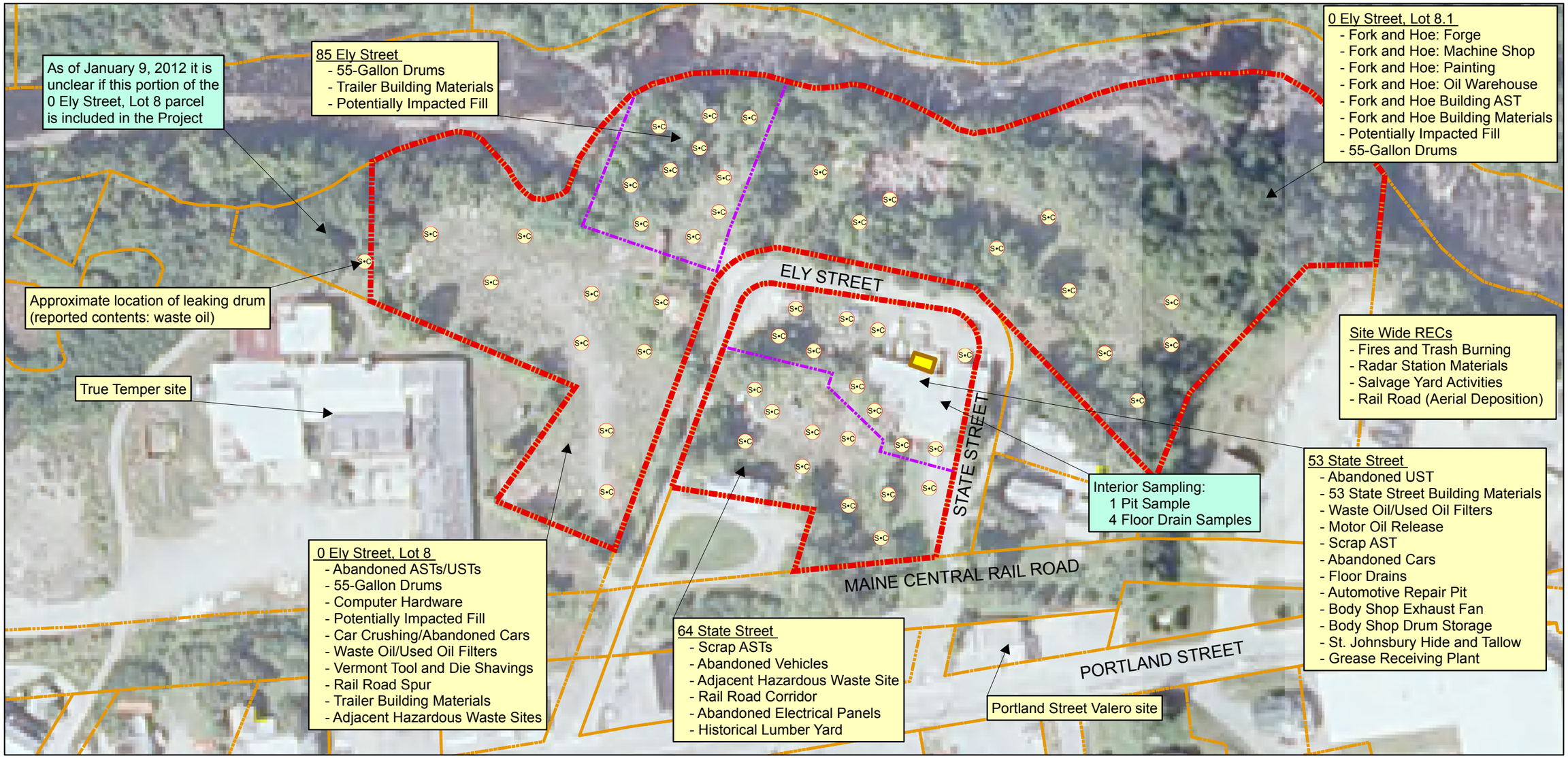

SOURCES:
1:40000 (1 meter) True Color Vermont orthos, flown July/Aug. 2009
St Johnsbury 2007 parcel map (VCGI)
ATC Phase I ESA Site Plan

LEGEND

- Preliminary Soil Screening Location
- UST (Approximate
- Project Boundary
- Parcel Boundaries From ATC 2012 Phase I ESA
- St Johnsbury 2007 Parcels

NOTE:
All sample locations are to be field-determined or chosen following the Reconnaissance phase of the investigation

MAP LOCATION

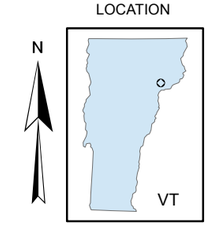

0 25 50 100 150 Feet

Figure 2 Site Features & Preliminary Field Screening Locations
Former VT Salvage
St. Johnsbury, Vermont

The Johnson Company

100 State Street, Suite 600
Montpelier, VT 05602

Drawn by: JEM Date: 2/26/13
Reviewed by: JKM Date: 3/5/13

Scale: 1 " = 100 feet Project: St J Proposal

Attachment 1 – Geiger Counter Manuals

Manual 1: Ludlum Survey Meter 3
Manual 2: Ludlum Survey Meter 5

LUDLUM MODEL 3
SURVEY METER

January 2006

Serial Number 213363 and Succeeding

Serial Numbers

LUDLUM MEASUREMENTS, INC.
501 OAK STREET, P.O. BOX 810
SWEETWATER, TEXAS 79556
325-235-5494, FAX: 325-235-4672

REV #	ALTERATIONS	DATE	BY
1	VALID	12/21/05	DDW

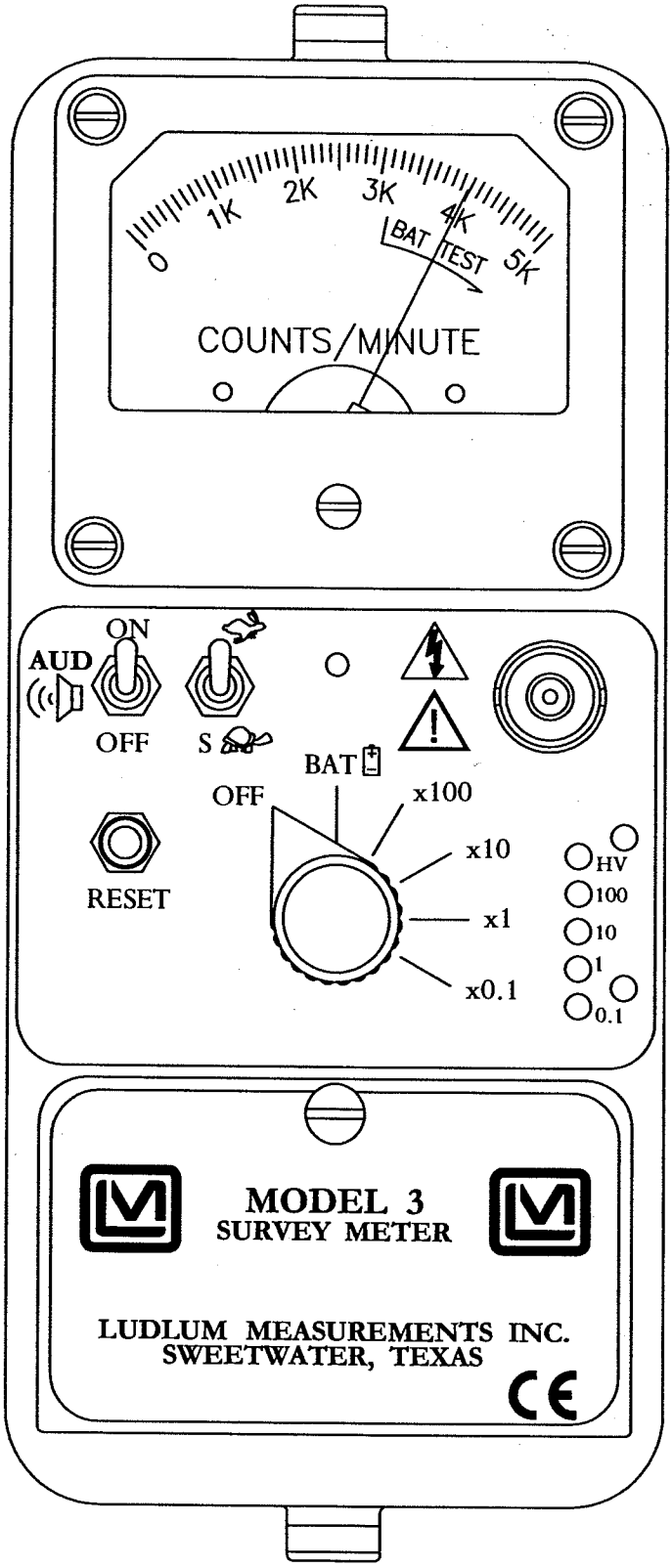

DWN	DATE	CHK	DATE	APP	DATE
DDW	12/21/05			JGW	12-21-05

DWG NUM: 4464-041 SCALE: FULL ☒ OTHER

TITLE M 3 FRONT PANEL

LUDLUM MEASUREMENTS, INC.
501 OAK STREET
SWEETWATER, TEXAS 79556

SERIES 464 SHEET 41A

Table of Contents

Introduction **1**

Getting Started **2**

Unpacking and Repacking **2-1**

Battery Installation **2-1**

Connecting a Detector to the Instrument **2-2**

Battery Test **2-2**

Instrument Test **2-2**

Operational Check **2-3**

Specifications **3**

Identification of Controls and Functions **4**

Safety Considerations **5**

Environmental Conditions for Normal Use **5-1**

Warning Markings and Symbols **5-1**

Cleaning and Maintenance Precautions **5-2**

Calibration and Maintenance **6**

Calibration **6-1**

Exposure Rate Calibration **6-1**

CPM Calibration **6-2**

Establishing an Operating Point **6-3**

Maintenance **6-4**

Recalibration **6-4**

Batteries **6-5**

Troubleshooting **7**

Troubleshooting Electronics which utilize a G-M Detector or Scintillator **7-1**

Troubleshooting G-M Detectors **7-3**

Troubleshooting Scintillators **7-4**

Technical Theory of Operation ***8***

Low Voltage Supply **8-1**

High Voltage Supply **8-1**

Detector Input **8-1**

Amplifier **8-1**

Discriminator **8-2**

Audio **8-2**

Scale Ranging **8-2**

Meter Drive **8-2**

Meter Reset **8-2**

Fast/Slow Time Constant **8-2**

Recycling ***9***

Parts List ***10***

Model 3 Survey Meter **10-1**

Main Board, Drawing 464 × 204 **10-1**

Wiring Diagram, Drawing 464 × 212 **10-3**

Drawings and Diagrams ***11***

Section 1

Introduction

The Model 3 is a portable radiation survey instrument with four linear ranges used in combination with exposure rate or cpm (counts per minute) meter dials. The instrument features a regulated high-voltage power supply, unimorph speaker with audio ON-OFF capability, fast-slow meter response, meter reset button and a six-position switch for selecting battery check or scale multiples of ×0.1, ×1, ×10 and ×100. Each range multiplier has its own calibration potentiometer. The unit body and meter housing are made of cast aluminum and the can is 0.090" thick aluminum.

Any Geiger-Mueller (G-M) detector offered by Ludlum Measurements will operate on this unit as well as any scintillation type detector. The instrument is typically set at 900 volts for G-M tube operation. For special requirements of G-M or scintillation detectors, the instrument high voltage may be adjusted from 200 to 1500 volts.

The unit is operated with two "D" cell batteries for operation from –4°F (–20°C) to 122°F (50°C). For instrument operation below 32°F (0°C) either very fresh alkaline or rechargeable NiCd batteries should be used.

Section 2

Getting Started

Unpacking and Repacking

Remove the calibration certificate and place it in a secure location. Remove the instrument and accessories (batteries, cable, etc.) and ensure that all of the items listed on the packing list are in the carton. Check individual item serial numbers and ensure calibration certificates match. The Model 3 serial number is located on the front panel below the battery compartment. Most Ludlum Measurements, Inc. detectors have a label on the base or body of the detector for model and serial number identification.

Important!

If multiple shipments are received, ensure that the detectors and instruments are not interchanged. Each instrument is calibrated to specific detector(s), and therefore not interchangeable.

To return an instrument for repair or calibration, provide sufficient packing material to prevent damage during shipment. Also provide appropriate warning labels to ensure careful handling. Include detector(s) and related cable(s) for calibration. Include brief information as to the reason for return, as well as return shipping instructions:

- **Return shipping address**
- **Customer name or contact**
- **Telephone number**
- **Description of service requested and all other necessary information**

Battery Installation

Ensure the Model 3 range selector switch is in the OFF position. Open the battery lid by pushing down and turning the quarter-turn thumbscrew

counterclockwise ¼ turn. Install two "D" size batteries in the compartment.

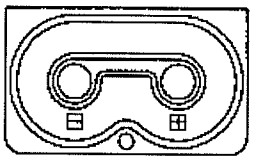

Note the (+) and (-) marks inside the battery door. Match the battery polarity to these marks. Close the battery box lid, push down and turn the quarter-turn thumb screw clockwise ¼ turn.

Note:

> Center post of a flashlight battery is positive. The batteries are placed in the battery compartment in opposite directions.

Connecting a Detector to the Instrument

Caution!

> The detector operating voltage (HV) is supplied to the detector via the detector input connector. A mild electric shock may occur if you make contact with the center pin of the input connector. Switch the Model 3 range selector switch to the OFF position before connecting or disconnecting the cable or detector.

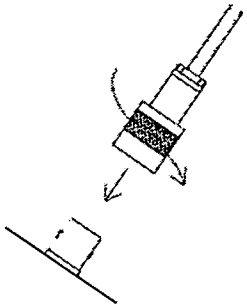

Connect one end of a detector cable to the detector by firmly pushing the connectors together while twisting clockwise ¼ turn. Repeat the process in the same manner with the other end of the cable and the instrument.

Battery Test

The batteries should be checked each time the instrument is turned on. Move the range switch to the BAT position. Ensure that the meter needle deflects to the battery check portion on the meter scale. If the meter does not respond, check to see if the batteries have been correctly installed. Replace the batteries if necessary.

Instrument Test

After checking the batteries, turn the instrument range switch to the X100 position. Place the AUD ON-OFF switch in the ON position. Expose the detector to a check source. The instrument speaker should emit "clicks" relative to the rate of counts detected. The "AUD ON/OFF" switch will silence the audible clicks if in the OFF position. It is recommended that the

"AUD ON/OFF" switch be kept in the OFF position when not needed in order to preserve battery life.

Rotate the range switch through the lower scales until a meter reading is indicated. While observing the meter fluctuations, select between the fast and slow response time ("F/S") positions to observe variations in the display. The "S" position should respond approximately 5 times slower than the "F" position.

Note:

The slow response position is normally used when the instrument is displaying low numbers which require a more stable meter movement. The fast response position is used at high rate levels.

Check the meter reset function by depressing the "RES" pushbutton switch and ensuring the meter needle drops to "0".

Once this procedure has been completed, the instrument is ready for use.

Operational Check

To assure proper operation of the instrument between calibrations and periods of nonuse, an instrument operational check including battery test and instrument test (as described above) should be performed prior to use. A reference reading with a check source should be obtained at the time of initial calibration or as soon as possible for use in confirming proper instrument operation. In each case, ensure a proper reading on each scale. If the instrument fails to read within ± 20% of a proper reading, it should be sent to a calibration facility for recalibration.

Section 3

Specifications

Power: Two "D" cell batteries housed in a sealed externally accessible compartment.

Battery Life: Typically greater than 2000 hours with alkaline batteries and with the AUD ON-OFF switch in the OFF position.

End-of-Battery Life Warning: At 2.1 Vdc the meter needle will drop to the edge of the BAT TEST or BAT OK area when the meter selector switch is moved to the BAT position. At 2.0 Vdc a steady audible tone will be emitted to warn the user of the low battery condition.

High Voltage: Adjustable from 400 to 1500 volts.

Threshold: Fixed at 40 mV ± 10 mV.

Meter: 2.5" (6.4 cm) arc, 1 mA analog type.

Meter Dial: 0-2 mR/hr, or 0-5k cpm, BAT TEST (others available).

Multipliers: ×0.1, ×1, ×10, ×100.

Range: Typically 0-200 mR/hr, or 0-500,000 counts/minute (cpm).

Linearity: Reading within 10% of true value with detector connected.

Battery Dependence: Less than 3% change in readings to battery failure indication.

Calibration Controls: Individual potentiometers for each range; accessible from front of instrument (protective cover provided).

Audio: Built-in unimorph speaker with ON-OFF switch (greater than 60 dB at 2 feet).

Response: Toggle switch for fast (4 seconds) or slow (22 seconds) from 10% to 90% of final reading.

Reset: Push button to zero the meter.

Connector: Series "C" (other available).

Size: 6.5" (16.5 cm) H × 3.5" (8.9 cm) W × 8.5" (21.6 cm) L.

Weight: 3.5 lbs. (1.6 kg) including batteries.

Construction: Cast and drawn aluminum with beige powder-coat

Cable: 39-inch with "C" connector (others available).

Section 4

Identification of Controls and Functions

See the Model 3 FRONT PANEL drawing at the beginning of this manual to reference the following controls:

Meter: 2.5" (6.4cm) arc, 1 mA analog type with pivot-and-jewel suspension. Typical meter dials are 0-2 mR/hr, 0-20 μSv/h, 0-5k cpm or combination of exposure rates (0-2 mR/hr or 0-20 μSv/h) and cpm and BAT TEST.

Connector: Used to connect the detector to the instrument. Typically series "C" but can be "BNC", "MHV", "UHF", or others.

Range Selector Switch: A six-position switch marked OFF, BAT, ×100, ×10, ×1, ×0.1. Turning the range selector switch from OFF to BAT provides the operator with a battery check of the instrument. A BAT check scale on the meter provides a visual means of checking the battery-charge status. Moving the range selector switch to one of the range multiplier positions (×100, ×10, ×1, ×0.1) provides the operator with an overall range of 0 to 500,000 cpm. Multiply the scale reading by the multiplier to determine the actual scale reading.

Calibration Controls: Recessed potentiometers which are used to calibrate the individual range selections and allow for high voltage adjustment from 400 to 1500 volts. A protective cover is provided to prevent tampering.

Battery Compartment: Sealed compartment to house two "D" cell batteries.

RESET Button: When depressed, this switch provides a rapid means to drive the meter to zero.

AUD ON-OFF Switch: In the ON position, operates the unimorph speaker, located on the left side of the instrument. The frequency of the clicks is relative to the rate of the incoming pulses. The higher the rate,

the higher the audio frequency. The audio should be turned OFF when not required to reduce battery drain.

F-S Toggle Switch: Provides meter response. Selecting the fast, "F" position of the toggle switch provides 90% of full scale meter deflection in four seconds. In the slow, "S" position, 90% of full scale meter deflection takes 22 seconds. In "F" position there is fast response and large meter deviation. The "S" position should be used for slow response and damped, meter deviation.

Section 5

Safety Considerations

Environmental Conditions for Normal Use

Indoor or outdoor use

No maximum altitude

Temperature range of –20°C to 50°C (–4°F to 122°F). May be certified for operation from –40°C to 65°C (–40°F to 150°F).

Maximum relative humidity of less then 95% (non-condensing)

Pollution Degree 1 (as defined by IEC 664).

Warning Markings and Symbols

Caution!

The operator or responsible body is cautioned that the protection provided by the equipment may be impaired if the equipment is used in a manner not specified by Ludlum Measurements, Inc.

The Model 3 Survey Meter is marked with the following symbols:

CAUTION, RISK OF ELECTRIC SHOCK (per ISO 3864, No. B.3.6) – designates a terminal (connector) that allows connection to a voltage exceeding 1 kV. Contact with the subject connector while the instrument is on or shortly after turning off may result in electric shock. This symbol appears on the front panel.

CAUTION (per ISO 3864, No. B.3.1) – designates hazardous live voltage and risk of electric shock. During normal use, internal components are hazardous live. This instrument must be isolated or disconnected from the hazardous live voltage before accessing the internal components. This symbol appears on the front panel. **Note the following precautions:**

Warning!

The operator is strongly cautioned to take the following precautions to avoid contact with internal hazardous live parts that are accessible using a tool:

1. Turn the instrument power OFF and remove the batteries.
2. Allow the instrument to sit for 1 minute before accessing internal components.

The "**crossed-out wheelie bin**" symbol notifies the consumer that the product is not to be mixed with unsorted municipal waste when discarding; each material must be separated. The symbol is placed on the battery compartment lid. See section 9, "Recycling" for further information.

Cleaning and Maintenance Precautions

The Model 3 may be cleaned externally with a damp cloth, using only water as the wetting agent. Do not immerse the instrument in any liquid. Observe the following precautions when cleaning or performing maintenance on the instrument:

1. Turn the instrument OFF and remove the batteries.
2. Allow the instrument to sit for 1 minute before cleaning the exterior or accessing any internal components for maintenance.

Section 6

Calibration and Maintenance

Calibration

Calibration controls are located on the front of the instrument under the calibration cover. The controls may be adjusted with a 1/8-inch blade screwdriver.

Note:

Local procedures may supersede the following

The instrument may be calibrated using Exposure Rate Calibration or CPM Calibration. Both methods are described below. Unless otherwise specified, the instrument is calibrated to Exposure Rate at the factory.

Note:

Measure High Voltage with a Model 500 Pulser or a High Impedance voltmeter with a high meg probe. If one of these instruments is not available use a voltmeter with a minimum of 1000 megohm input resistance.

Exposure Rate Calibration

Connect the input of the instrument to a negative pulse generator, such as a Ludlum Model 500 Pulser.

Caution!

The instrument input operates at a high potential. Connect the pulse generator through a 0.01μF, 3,000-volt capacitor, unless the pulse generator is already protected.

Adjust the HV control for the proper operation voltage of the detector to be used. Disconnect the Pulser and connect the detector to the instrument.

Turn the range selector switch to the ×100 position. Expose the detector to a calibrated gamma field which corresponds to approximately 80% of full-scale meter deflection. Adjust the ×100 calibration control for the proper reading.

Reposition the detector so the field corresponds to approximately 20% of full-scale meter deflection. Confirm that the meter reading is within ± 10% of the field.

Repeat this process for the ×10, ×1 and ×0.1 ranges.

CPM Calibration

Connect the input of the instrument to a negative pulse generator, such as a Ludlum Model 500 Pulser.

Caution!

The instrument input operates at a high potential. Connect the pulse generator through a 0.01μF, 3,000-volt capacitor, unless the pulse generator is already protected

Adjust the HV control for the proper operating voltage of the detector to be used. Adjust the Pulser negative pulse frequency to provide a meter deflection of approximately 80% of full-scale on the ×100 range. Adjust the ×100 calibration control for the proper reading.

Check the 20% scale indication of the Model 3 by reducing the Pulser count rate by a factor of 4. The Model 3 should read within ± 10% of the actual pulse rate. Decrease the pulse rate of the Model 500 by one decade and turn the Model 3 range selector to the next lower range. Repeat the above procedure for the remaining lower ranges.

Note:

In the event that any reading is not within ± 10% of the true value on any scale after any of the above calibration methods is performed, a reading within ± 20% of true value shall be acceptable- if a calibration graph or chart is provided with the instrument. Instruments that cannot meet these criteria are defective and require repair.

Establishing an Operating Point

The operating point for the instrument and detector is established by setting the instrument high voltage (HV). The proper selection of this point is the key to instrument performance. Efficiency, background sensitivity and noise are fixed by the physical makeup of the given detector and rarely vary from unit to unit. However, the selection of the operating point makes a marked difference in the apparent contribution of these three sources of count.

In setting the operating point, the final result of the adjustment is to establish the system gain so that the desirable signal pulses (including background) are above the discrimination level and the unwanted pulses from noise are below the discrimination level and are therefore not counted. The system gain is controlled by adjusting the high voltage.

Note:

Measure the high voltage with a Ludlum Model 500 Pulser. If the Pulser does not have a high voltage readout, use a high impedance voltmeter with at least 1000 megohm input resistance to measure the high voltage.

Calibration shall include response evaluations and adjustment for two points of each scale of the instrument. The points shall be separated by at least 40% of the full-scale value and should be represented by points of approximately equal distance from the mid-point of the scale. For example, 25% and 75%, or 20% and 80% could be used.

G-M Detectors: In the special case of G-M detectors, a minimum voltage must be applied to establish the Geiger-Mueller characteristic. The output pulse height of the G-M Detector is not proportional to the energy of the detected radiation. Most G-M detectors operate at 900 volts, although

some miniature detectors operate at 400-500 volts. Refer to the detector operating manual for specific recommendations. If a recommended setting is unavailable, plot a HV versus count rate curve to produce a plateau graph similar to the one displayed below. Adjust the HV for 25-50 volts above the knee or start of the plateau. For mixed detector use, the high voltage may be tailed for both, as long as the G-M detector is operated within the recommended voltage range.

Scintillators: Scintillation type detectors have a wide gain spectrum, typically 1000:1 at a single operating point. An operating voltage versus count rate curve (plateau) must be established to determine the proper operating voltage. The operating voltage is typically set above the knee of the plateau. Plot the HV versus background and source count to produce a plateau graph similar to the one in the figure below. Adjust the HV to 25-50 volts above the knee or start of the plateau. This provides the most stable operating point for the detector.

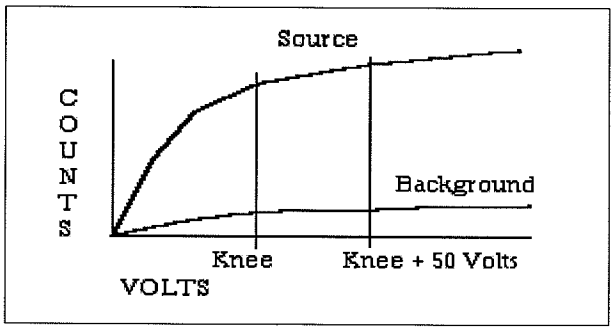

Note:

If more than one detector is to be used with the instrument and the operating voltages are different, the HV will have to be readjusted for each detector substitution.

Maintenance

Instrument maintenance consists of keeping the instrument clean and periodically checking the batteries and the calibration. The Model 3 instrument may be cleaned with a damp cloth (using only water as the wetting agent). Do not immerse instrument in any liquid. Observe the following precautions when cleaning:

1. Turn the instrument OFF and remove the batteries.

2. Allow the instrument to sit for 1 minute before accessing internal components.

Recalibration

Recalibration should be accomplished after maintenance or adjustments have been performed on the instrument. Recalibration is not normally required following instrument cleaning, battery replacement, or detector cable replacement.

Note:

Ludlum Measurements, Inc. recommends recalibration at intervals no greater than one year. Check the appropriate regulations to determine required recalibration intervals.

Ludlum Measurements offers a full service repair and calibration department. We not only repair and calibrate our own instruments but most other manufacturer's instruments. Calibration procedures are available upon request for customers who choose to calibrate their own instruments.

Batteries

The batteries should be removed any time the instrument is placed into storage. Battery leakage may cause corrosion on the battery contacts, which must be scraped off and/or washed using a paste solution made from baking soda and water. Use a spanner wrench to unscrew the battery contact insulators, exposing the internal contacts and battery springs. Removal of the handle will facilitate access to these contacts.

Note:

Never store the instrument over 30 days without removing the batteries. Although this instrument will operate at very high ambient temperatures, battery seal failure may occur at temperatures as low as 100°F.

Section 7

Troubleshooting

Occasionally, you may encounter problems with your LMI instrument or detector that may be repaired or resolved in the field, saving turnaround time and expense in returning the instrument to us for repair. Toward that end, LMI electronics technicians offer the following tips for troubleshooting the most common problems. Where several steps are given, perform them in order until the problem is corrected. Keep in mind that with this instrument, the most common problems encountered are: (1) detector cables, (2) sticky meters, (3) battery contacts.

Note that the first troubleshooting tip is for determining whether the problem is with the electronics or with the detector. A Ludlum Model 500 Pulser is invaluable at this point, because of its ability to simultaneously check high voltage, input sensitivity or threshold, and the electronics for proper counting.

We hope these tips will prove to be helpful. As always, please call if you encounter difficulty in resolving a problem or if you have any questions.

Troubleshooting Electronics which utilize a G-M Detector or Scintillator

SYMPTOM	POSSIBLE SOLUTION
No power (or meter does not reach BAT TEST or BAT OK mark)	1. Check batteries and replace if weak. 2. Check polarity (See marks inside batter lid). Are the batteries installed backwards?

SYMPTOM	POSSIBLE SOLUTION
No power (or meter does not reach BAT TEST or BAT OK mark) (continued)	3. Check battery contacts. Clean them with rough sandpaper or use an engraver to clean the tips. 4. Remove the can and check for loose or broken wires.
Nonlinear Readings	1. Check the high voltage (HV) using a Ludlum Model 500 Pulser (or equivalent). If a Multimeter is used to check the HV, ensure that one with high impedance is used, as a standard Multimeter could be damaged in this process. 2. Check for noise in the detector cable by disconnecting the detector, placing the instrument on the lowest range setting, and wiggling the cable while observing the meter face for significant changes in readings. 3. Check for "sticky" meter movement. Does the reading change when you tap the meter? Does the meter needle "stick" at any spot? 4. Check the "meter zero." Turn the power OFF. The meter should come to rest on "0".
Meter goes full-scale or "Pegs Out"	1. Replace the detector cable to determine whether or not the cable has failed- causing excessive noise. 2. Check the HV and, if possible, the input threshold for proper setting.

SYMPTOM	POSSIBLE SOLUTION
Meter goes full-scale or "Pegs Out" (continued)	3. Remove the can and check for loose or broken wires.
	4. Ensure that the instrument's "can" is properly attached. When attached properly, the speaker will be located on the left side of the instrument. If the can is on backwards, interference between the speaker and the input preamplifier may cause noise.
No Response to Radiation	1. Substitute a "known good" detector and/or cable.
	2. Has the correct operating voltage been set? Refer to the calibration certificate or detector instruction manual for correct operating voltage. If the instrument uses multiple detectors, confirm that the high voltage is matched to the current detector being used.
No Audio	1. Ensure that the AUD ON-OFF switch is in the ON position.
	2. Remove the instrument housing and check the connection between the circuit board and the speaker. Plug in the 2-pin connector if necessary.

Troubleshooting G-M Detectors

1. If the tube has a thin mica window, check for window breakage. If damage is evident, the tube must be replaced.

2. Check the HV. For most G-M tubes, the voltage is normally 900 Vdc, or 460-550 Vdc for "peanut" tubes (Ludlum Model 133 series).

3. If the input sensitivity is too low, the user could see some double-pulsing.

4. Wires to the tube may be broken or the crimped connector could have a loose wire.

Troubleshooting Scintillators

1. Alpha or Alpha/Beta scintillators are prone to light leaks. They can be tested for this problem in a dark room or with a bright light. If a light leak is determined, changing the Mylar window assembly will usually fix the problem.

Note:

When replacing the window, make sure to use a window made with the same thickness Mylar and the same number of layers as the original window.

2. Verify that the HV and input sensitivity are correct. Alpha and gamma scintillators typically operate from 10-35 mV. High voltage varies with the photomultiplier tubes (PMT) from as low as 600 Vdc, to as high as 1400 Vdc.

3. On a gamma scintillator, visually inspect the crystal for breakage or humidity leakage. Water inside the crystal will turn it yellow and gradually degrade performance.

4. Check the PMT to see if the photocathode still exists. If the end of the PMT is clear (not brownish), this indicates a loss of vacuum which will render the PMT useless.

Section 8

Technical Theory of Operation

Low Voltage Supply

Battery voltage is coupled to U11 and associated components (a switching regulator) to provide 5 volts at pin 8 to power all logic circuits. A voltage divider (R27 and R32) located at pin 1 of U11 sets the end-of-battery–life squeal at 2.0 Vdc. Components R12 and C30 provide filtering to create +5 VA used by the amplifier and discriminator circuits.

High Voltage Supply

High voltage is developed by pulses from the switching regulator U13 to transformer T1. High voltage is multiplied by the ladder network of diodes CR3 through CR7 and capacitors C18 through C27. High voltage is coupled back through R39 to pin 8 of U13. High voltage output is set by front panel potentiometer R42, which sets the voltage feedback of 1.31 Vdc to pin 8 of U13. R38 and C28 provide filtering.

Detector Input

Detector pulses are coupled from the detector through C6 to amplifier input pin 2 of U4. CR1 protects U4 from input shorts. R37 couples the detector to the high voltage supply.

Amplifier

A self-biased amplifier provides gain in proportion to R15 divided by R14, with some gain loss due to feedback capacitor C4. A transistor (pin 3 of U4) provides amplification. U6 is configures as a constant current source to pin 3 of U4. The output self-biases to 2 Vbe (approximately 1.4 volts) at the emitter of Q1. This provides just enough bias current through pin 3 of U4 to conduct all of the current from the current source. Positive pulses from the emitter of Q1 are coupled to the discriminator.

Discriminator

Comparator U8 provides discrimination. The discriminator is set by a voltage divider (R21 and R23), coupled to pin 3 of U8. As the amplified pulses at pin 4 of U8 increase above the discriminator voltage, 5 volt negative pulses are produced at pin 1 of U8. These pulses are coupled to pin 5 of U9 for meter drive and pin 12 of U9 for audio.

Audio

Discriminator pulses are coupled to univibrator pin 12 of U9. The front panel audio ON-OFF selector controls the reset at pin 13 of U9. When ON, pulses from pin 10 of U9 turn on oscillator U12, which drives the housing-mounted unimorph speaker. Speaker tone is set by R31 and C14. Tone duration is controlled by R22 and C7.

Scale Ranging

Detector pulses from the discriminator are coupled to univibrator pin 5 of U9. For each scale, the pulse width of pin 6 of U9 is changed by a factor of 10 with the actual pulse width being controlled by the front panel switch, the analog switches U1 and U2, and the related potentiometers. This arrangement allows the same current to be delivered to C9 by 1 count on the ×0.1 range as 1000 counts on the ×100 range.

Meter Drive

Pulses from pin 6 of U9 charge capacitor C9. A constant current driver (opamp U10 and transistor Q2) delivers proportional current to the meter. For battery test (BAT TEST), the meter is directly coupled by the analog switch U3 to the batteries through resistor R8.

Meter Reset

Ratemeter reset is initiated by changing the voltage differential at C9 to zero when the RESET button is depressed.

Fast/Slow Time Constant

For the slow time constant, C17 is switched from the output of the meter drive to parallel C9.

Section 9

Recycling

Ludlum Measurements, Inc. supports the recycling of the electronics products it produces for the purpose of protecting the environment and to comply with all regional, national and international agencies that promote economically and environmentally sustainable recycling systems. To this end, Ludlum Measurements, Inc. strives to supply the consumer of its goods with information regarding reuse and recycling of the many different types of materials used in its products. With many different agencies, public and private, involved in this pursuit it becomes evident that a myriad of methods can be used in the process of recycling. Therefore, Ludlum Measurements, Inc. does not suggest one particular method over another, but simply desires to inform its consumers of the range of recyclable materials present in its products, so that the user will have flexibility in following all local and federal laws.

The following types of recyclable materials are present in Ludlum Measurements, Inc. electronics products, and should be recycled separately. The list is not all-inclusive, nor does it suggest that all materials are present in each piece of equipment:

Batteries	Glass	Aluminum and Stainless Steel
Circuit Boards	Plastics	Liquid Crystal Display (LCD)

Ludlum Measurements, Inc. products which have been placed on the market after August 13, 2005 have been labeled with a symbol recognized internationally as the "crossed-out wheelie bin" which notifies the consumer that the product is not to be mixed with unsorted municipal waste when discarding; each material must be separated. The symbol will be placed near the AC receptacle, except for portable equipment where it will be placed on the battery lid.

The symbol appears as such:

Section 10

Parts List

	Reference	Description	Part Number
Model 3 Survey Meter	UNIT	Completely Assembled Model 3 Survey Meter	48-1605
Main Board, Drawing 464 × 204	BOARD	Completely Assembled Main Circuit Board	5464-204
CAPACITORS	C1	47pF, 100V	04-5660
	C2	0.1µF, 35V	04-5755
	C3	0.0047µF, 100V	04-5669
	C4	10pF, 100V	04-5673
	C5	0.01µF, 50V	04-5664
	C6	100pF, 3KV	04-5735
	C7	0.022µF, 50V	04-5667
	C8	1µF, 16V	04-5701
	C9	10µF, 25V	04-5655
	C10	100pF, 100V	04-5661
	C11	68µF, 10V	04-5654
	C12	10µF, 25V	04-5728
	C14	470pF, 100V	04-5668
	C15	220pF, 100V	04-5674
	C16	68µF, 10V	04-5654
	C17	47µF, 10V	04-5666
	C18-C27	0.01µF, 500V	04-5696
	C28	0.001µF, 2KV	04-5703
		or 100pF, 3KV	04-5735
	C29	10µF, 25V	04-5655
	C30-C31	1µF, 16V	04-5701
	C32	470pF, 100V	04-5668

	Reference	Description	Part Number
TRANSISTORS	Q1	MMBT3904LT1	05-5841
	Q2	MMBT4403LT1	05-5842
INTEGRATED CIRCUITS	U1-U3	MAX4542ESA	06-6453
	U4-U5	CMXT3904	05-5888
	U6	CMXT3906	05-5890
	U7	MAX4541ESA	06-6452
	U8	MAX985EUK-T	06-6459
	U9	CD74HC4538M	06-6297
	U10	LMC7111BIM5X	06-6410
	U11	LT1304CS8-5	06-6434
	U12	MIC1557BM5	06-6457
	U13	LT1304CS8	06-6394
DIODES			
	CR1	CMPD2005S	07-6468
	CR2	RECTIFIER CMSH1-40M	07-6411
	CR3-CR7	CMPD2005S	07-6468
	CR9	RECTIFIER CMSH1-40M	07-6411
SWITCHES			
	SW1	D5G0206S-9802	08-6761
	SW2	TP11LTCQE	08-6770
	SW3-SW4	7101SDCQE	08-6781
POTENTIOMETERS / TRIMMERS			
	R33	250K, 64W254, ×100	09-6819
	R34	250K, 64W254, ×10	09-6819
	R35	500K, 64W504, ×1	09-6850
	R36	250K, 64W254, ×0.1	09-6819
	R42	1.2M, 3296W, HV	09-6814
RESISTORS			
	R1-R5	200K, 1/8W, 1%	12-7992
	R6	8.25K, 1/8W, 1%	12-7838
	R7	10K, 1/8W, 1%	12-7839
	R8	2.37K, 1/8W, 1%	12-7861
	R9-R11	10K, 1/8W, 1%	12-7839
	R12	200 Ohm, 1/8W, 1%	12-7846
	R13	10K, 1/8W, 1%	12-7839
	R14	4.75K, 1/8W, 1%	12-7858

	Reference	Description	Part Number
	R15	200K, 1/8W, 1%	12-7992
	R16	10K, 1/8W, 1%	12-7839
	R17	1K, 1/8W, 1%	12-7832
	R18	4.75K, 1/8W, 1%	12-7858
	R19	2K, 1/8W, 1%	12-7926
	R20-R21	100K, 1/8W, 1%	12-7834
	R22	1M, 1/8W, 1%	12-7844
	R23	2.49K, 1/8W, 1%	12-7999
	R24	14.7K, 1/8W, 1%	12-7068
	R25	200K, 1/4W, 1%	12-7992
	R26	100K, 1/4W, 1%	12-7834
	R27	68.1K, 1/8W, 1%	12-7881
	R28	100K, 1/8W, 1%	12-7834
	R29	1K, 1/8W, 1%	12-7832
	R30	100K, 1/8W, 1%	12-7834
	R31	475K, 1/8W, 1%	12-7859
	R32	100K, 1/8W, 1%	12-7834
	R37	100K, 1/8W, 1%	12-7834
	R38	4.75M, 1/8W, 1%	12-7995
	R39	500M, 3KV, 2%	12-7031
	R40	402K, 1/8W, 1%	12-7888
	R44	1K, 1/4W, 1%	12-7832
CONNECTORS			
	P1	640456-5 - MTA100	13-8057
	P2	640456-6 - MTA100 (installed as required)	13-8095
	P3	640456-2 - MTA100	13-8073
INDUCTOR	L1	22 μH	21-9808
TRANSFORMER	T1	31032R	21-9925

Wiring Diagram, Drawing 464 × 212

CONNECTORS	J1	MTA100×5, MAIN BOARD 5464-204	13-8140
	J2	OPTIONAL (M3 overload) MTA100×6, 5464-204	13-8171
	J3	MTA100×2, MAIN BOARD 5464-204	13-8178

	Reference	Description	Part Number
AUDIO			
	DS1	UNIMORPH TEC3526-PU	21-9251
BATTERIES			
	B1-B2	"D" DURACELL BATTERY	21-9313
MISCELLANEOUS			
	*	PORTABLE BATTERY CONTACT ASSEMBLY	2001-042
	*	MODEL 3 CASTING	7464-219
	*	MODEL 3 MAIN HOUSING	8464-035
	*	PORTABLE CAN ASSEMBLY (MTA)	4363-441
	*	PORTABLE KNOB	08-6613
	M1	METER ASSEMBLY METER BEZEL W/GLASS W/O SCREWS	4364-188
	*	METER MOVEMENT (1mA)	15-8030
	*	PORTABLE METER FACE	7363-136
	*	HARNESS-PORT CAN WIRES	8363-462
	*	BATTERY LID W/O LATCH KIT MODEL 3	2363-191
	*	PORTABLE LATCH KIT W/O BATTERY LID	4363-349
	*	PORTABLE HANDLE(GRIP) W/SCREWS	4363-139
	*	PORTHANDLE FOR CLIP W/SCREWS	4363-203
	*	REPLACEMENT CABLE (STD 39")	40-1004
	*	CLIP (44-3 TYPE) W/SCREWS	4002-026-01
	*	CLIP (44-6 TYPE) W/SCREWS	4010-007-01
	*	LABEL-M3 CALIBRATION	2310602
	*	LABEL-M3 BATTERY LID	2310601
	*	LABEL-M3 FACEPLATE	2310603

Section 11

Drawings

MAIN CIRCUIT BOARD, Drawing 464 × 204 (3 sheets)

MAIN CIRCUIT BOARD LAYOUT, Drawing 464 × 205 (2 sheets)

CHASSIS WIRING DIAGRAM, Drawing 464 × 212

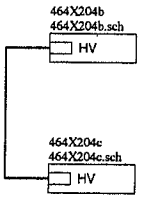

LUDLUM MEASUREMENTS, INC.
PO Box 810
501 Oak Street
Sweetwater, Texas 79556
U.S.A. 1-800-622-0828

Drawn: JK	24-MAY-04	Title:	MAIN BOARD		
Design: DL	24-MAY-04	Model:	M3		
Check:		Board#:	5464-204		
Approve:		Sheet:	1 of 3	Series	Sheet
16:16:35	27-May-2004	Rev:		464	204
464x204a.sch					

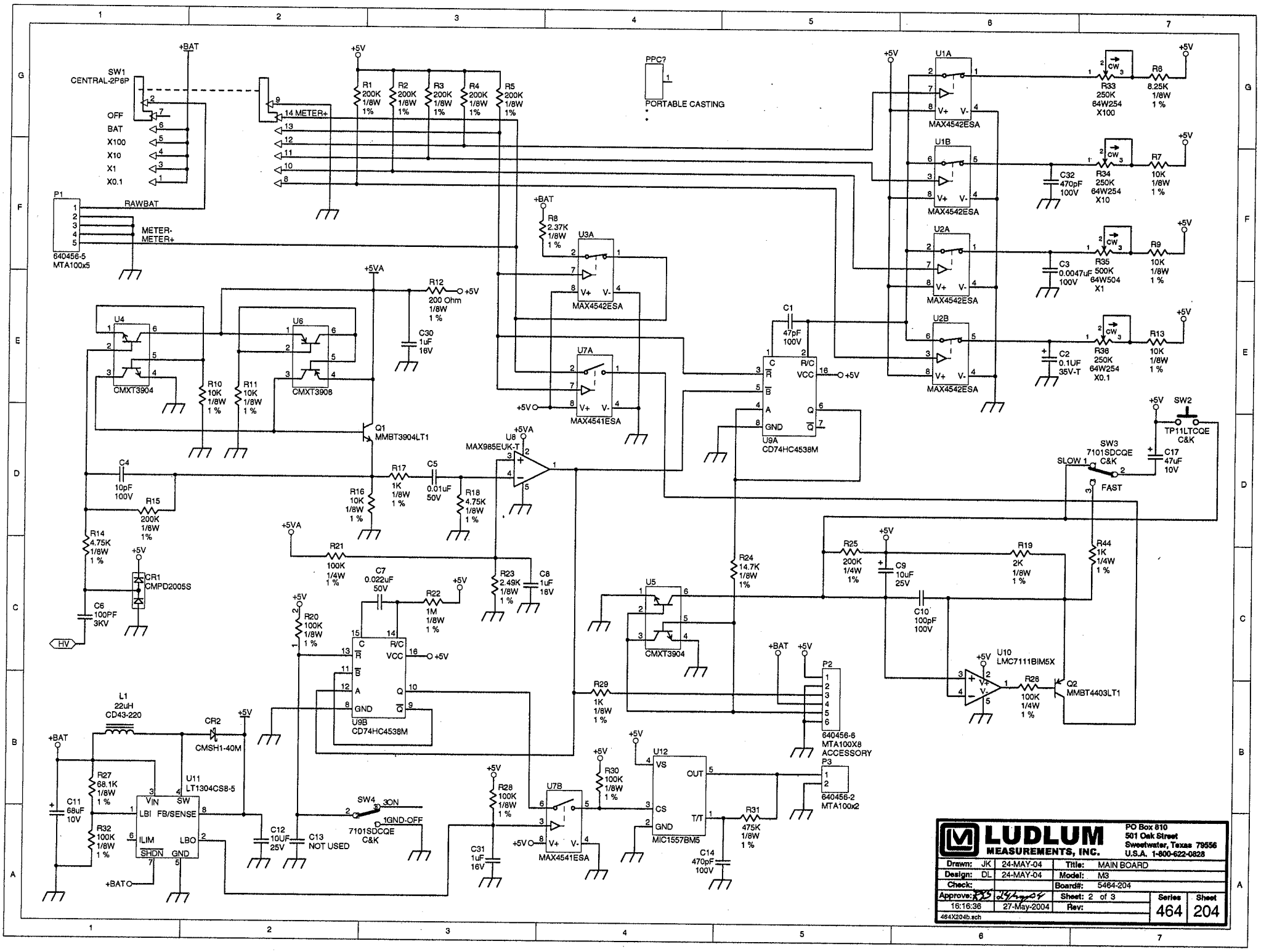
SW1
CENTRAL-2P6P
OFF
BAT
X100
X10
X1
X0.1
+BAT
14 METER+
R1 200K 1/8W 1%
R2 200K 1/8W 1%
R3 200K 1/8W 1%
R4 200K 1/8W 1%
R5 200K 1/8W 1%
+5V
PPC7
PORTABLE CASTING
P1
RAWBAT
METER-
METER+
640456-5
MTA100x5
U1A
U1B
U2A
U2B
MAX4542ESA
R33 250K 64W254 X100
R34 250K 64W254 X10
R35 500K 64W504 X1
R36 250K 64W254 X0.1
R6 8.25K 1/8W 1 %
R7 10K 1/8W 1 %
R9 10K 1/8W 1 %
R13 10K 1/8W 1 %
C32 470pF 100V
C3 0.0047uF 100V
C2 0.1UF 35V-T
R8 2.37K 1/8W 1 %
U3A
U7A
MAX4541ESA
+5VA
R12 200 Ohm 1/8W 1 %
C30 1uF 16V
U4
U6
CMXT3904
CMXT3908
R10 10K 1/8W 1 %
R11 10K 1/8W 1 %
Q1 MMBT3904LT1
C1 47pF 100V
U9A
CD74HC4538M
U8
MAX985EUK-T
C4 10pF 100V
R15 200K 1/8W 1%
R14 4.75K 1/8W 1 %
R16 10K 1/8W 1 %
R17 1K 1/8W 1 %
C5 0.01uF 50V
R18 4.75K 1/8W 1 %
CR1 CMPD2005S
C6 100PF 3KV
HV
R21 100K 1/4W 1 %
C7 0.022uF 50V
R22 1M 1/8W 1 %
R20 100K 1/8W 1 %
R23 2.49K 1/8W 1 %
C8 1uF 16V
U9B
CD74HC4538M
R24 14.7K 1/8W 1%
U5
CMXT3904
R29 1K 1/8W 1 %
SW2
TP11LTCQE
C&K
C17 47uF 10V
SW3
7101SDCQE
C&K
SLOW
FAST
R25 200K 1/4W 1%
C9 10uF 25V
R19 2K 1/8W 1 %
R44 1K 1/4W 1 %
C10 100pF 100V
U10
LMC7111BIM5X
R26 100K 1/4W 1 %
Q2 MMBT4403LT1
P2
640456-6
MTA100X8
ACCESSORY
P3
640456-2
MTA100x2
L1 22uH CD43-220
CR2 CMSH1-40M
C11 68uF 10V
R27 68.1K 1/8W 1 %
R32 100K 1/8W 1 %
U11 LT1304CS8-5
VIN
SW
LBI
FB/SENSE
ILIM
LBO
SHDN
GND
C12 10UF 25V
C13 NOT USED
SW4
3ON
1GND-OFF
7101SDCQE
C&K
R28 100K 1/8W 1 %
C31 1uF 16V
U7B
MAX4541ESA
R30 100K 1/8W 1 %
U12
MIC1557BM5
VS
OUT
CS
T/T
GND
R31 475K 1/8W 1 %
C14 470pF 100V
LUDLUM MEASUREMENTS, INC.
PO Box 810
501 Oak Street
Sweetwater, Texas 79556
U.S.A. 1-800-622-0828
Drawn: JK 24-MAY-04
Design: DL 24-MAY-04
Check:
Approve:
16:16:36 27-May-2004
464X204b.sch
Title: MAIN BOARD
Model: M3
Board#: 5464-204
Sheet: 2 of 3
Rev:
Series 464
Sheet 204

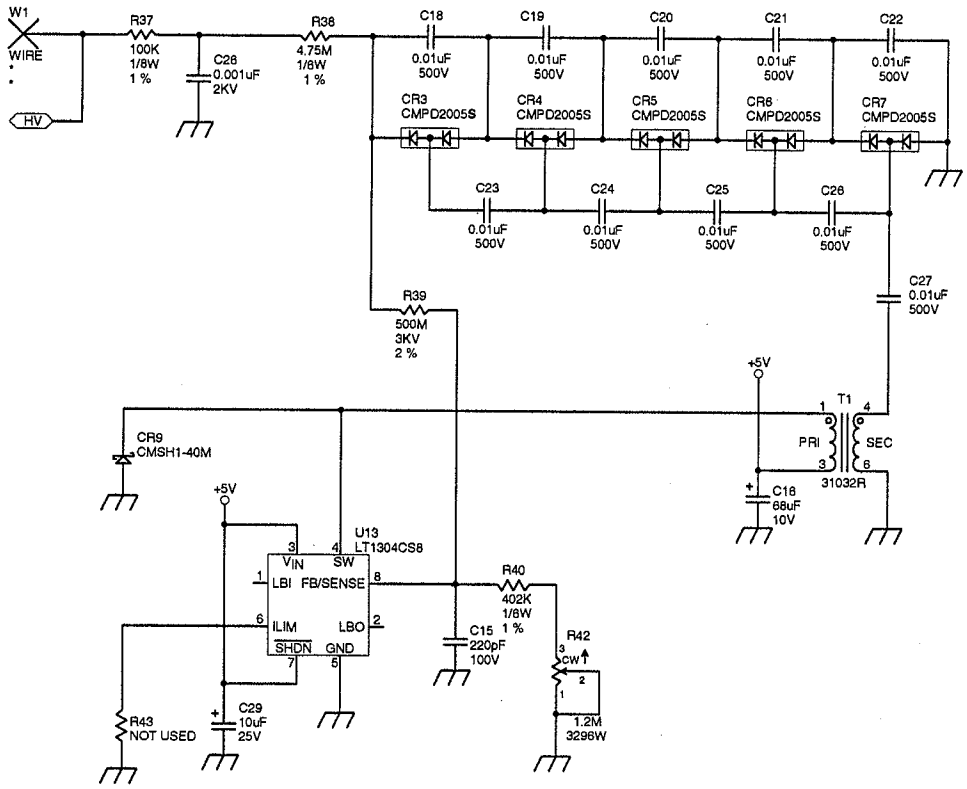

LUDLUM MEASUREMENTS, INC.		PO Box 810 501 Oak Street Sweetwater, Texas 79556 U.S.A. 1-800-622-0828	
Drawn: JK	24-MAY-04	Title: MAIN BOARD	
Design: DL	24-MAY-04	Model: M3	
Check:		Board#: 5464-204	
Approve: RM 24 May 04		Sheet: 3 of 3	Series 464 / Sheet 204
16:16:37	27-May-2004	Rev:	
464X204c.sch			

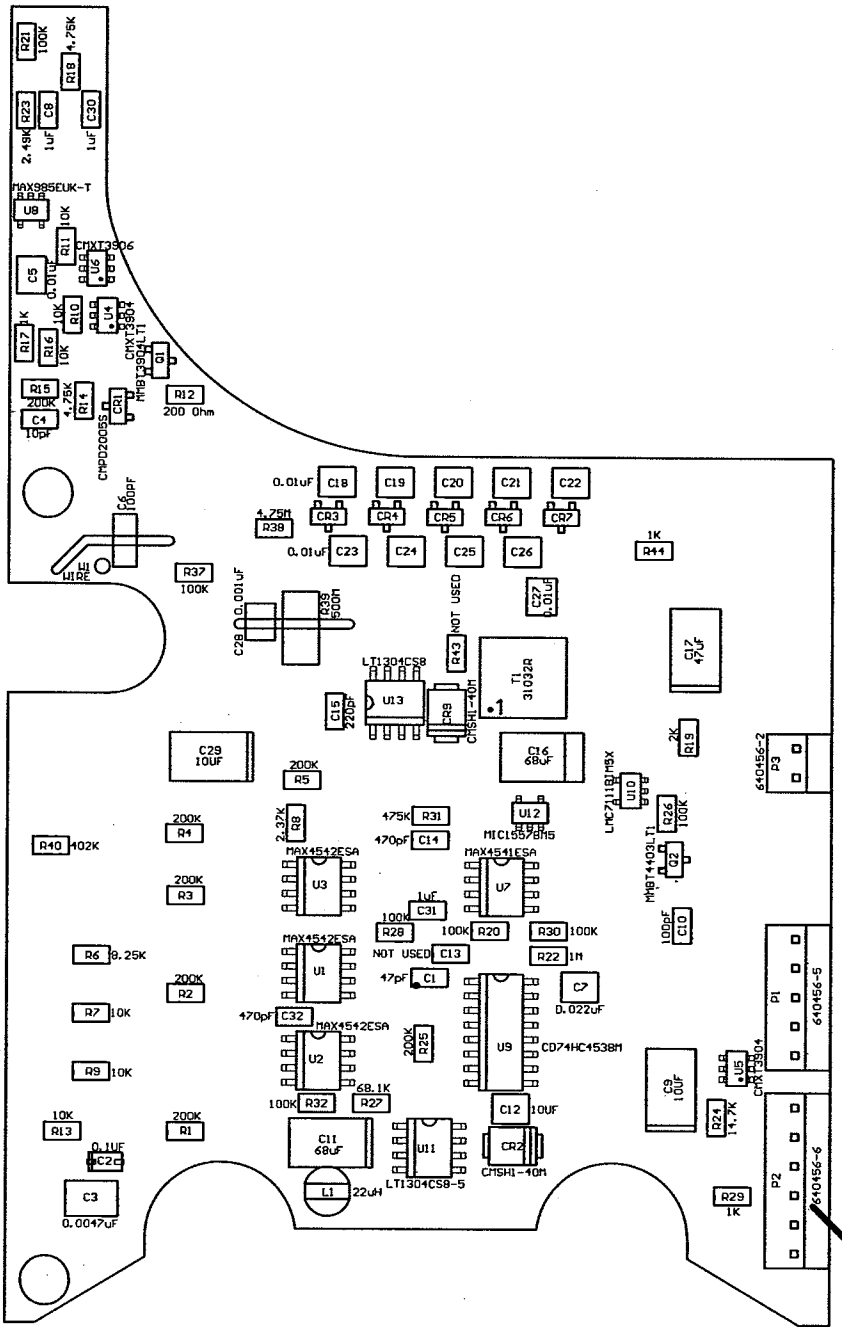

Drawn: JK	24-MAY-04	Title: MAIN BOARD			
Design: DL	24-MAY-04				
Check:		Model: M3			
Approve: RSS	24 May 04	Board#: 5464-204			
Layer:		Rev:	Series	Sheet	
	16:24:25 27-May-2004	SCALE: 7.74	464	205	

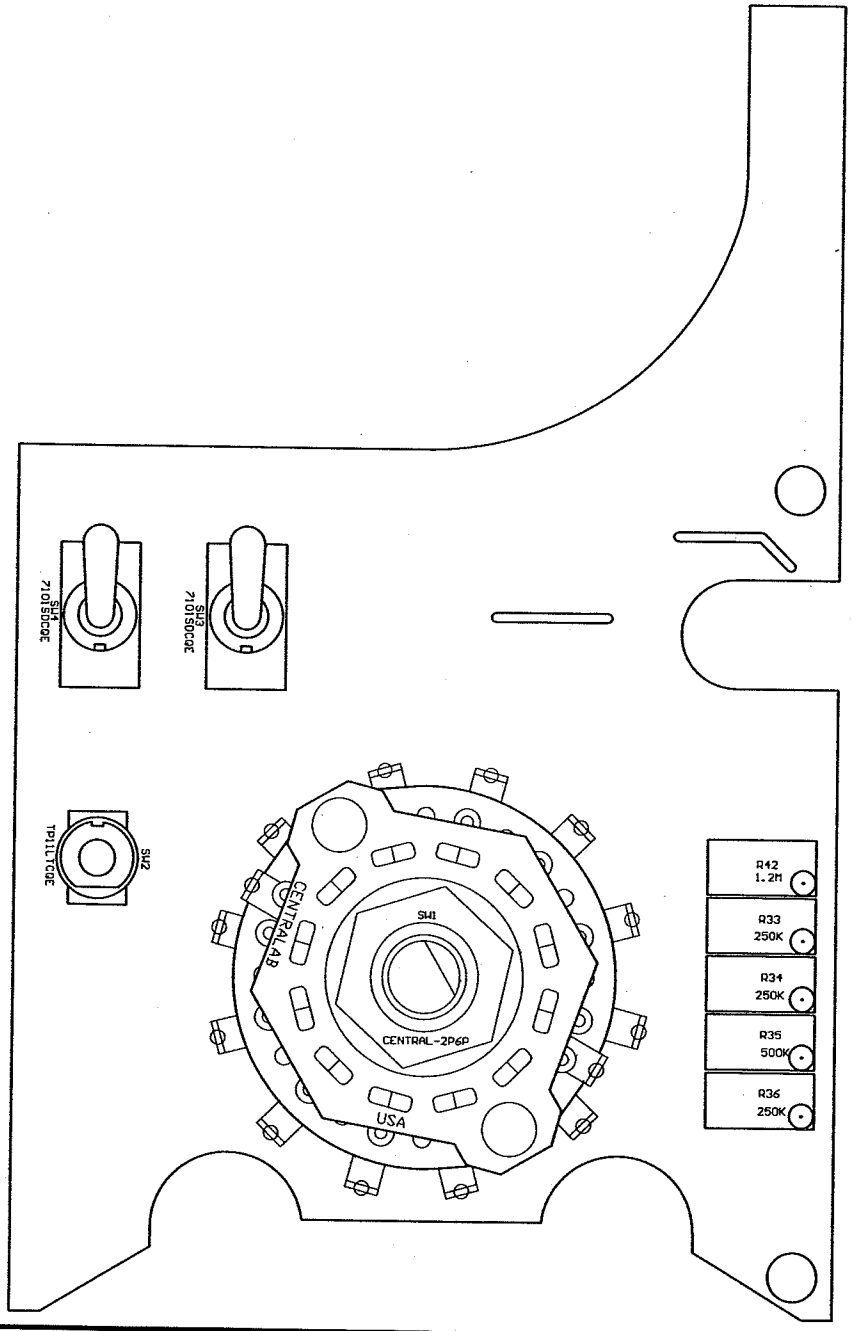

Drawn: JK	24-MAY-04	Title: MAIN BOARD			
Design: DL	24-MAY-04				
Check:		Model: M3			
Approve: DSS	24May04	Board#: 5464-204			
Layer:		Rev:	Series	Sheet	
	16:24:26 27-May-2004	SCALE: 7.74	464	205	

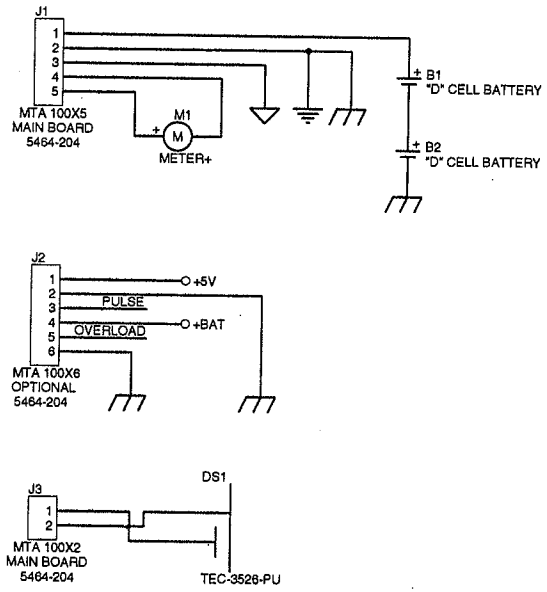

LUDLUM MEASUREMENTS, INC.

PO Box 810
501 Oak Street
Sweetwater, Texas 79556
U.S.A. 1-800-622-0828

Drawn: JK	01-JUN-094	Title: WIRING DIAGRAM	
Design: RSS	01-JUN-04	Model: M3	
		Board#: 5464-204	
Approve: JWS 01-JUN-04		Sheet: 1 of 1	Series 464 / Sheet 212
09:36:52	1-Jun-2004	Rev:	
464X212.wd			

LUDLUM MODEL 5
GEIGER COUNTER

Revised July 1999
Serial No. 148120 and Succeeding
Serial Numbers

LUDLUM MEASUREMENTS, INC.
501 OAK ST., P.O. BOX 810
SWEETWATER, TX 79556
915/235-5494 FAX: 915/235-4672

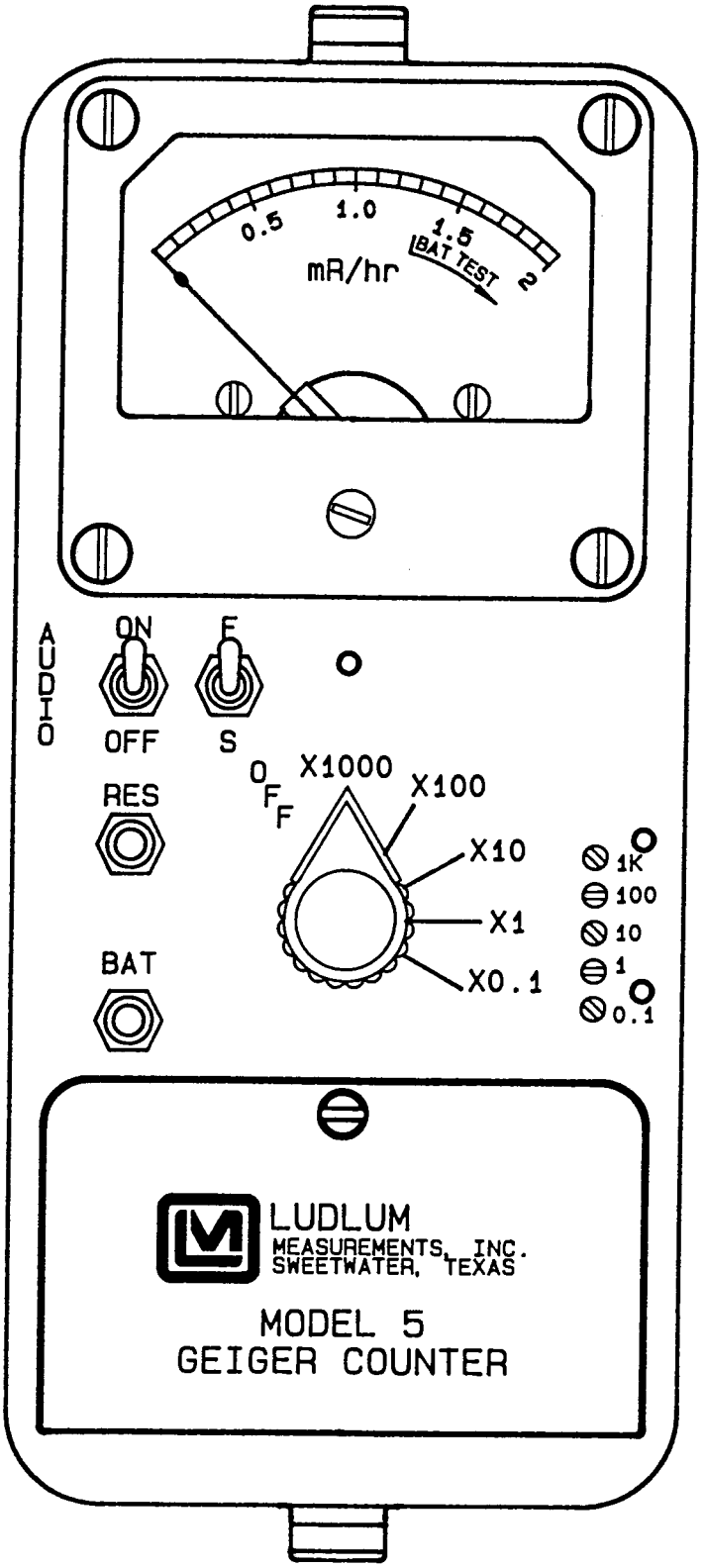

CHG	NO.				DWN	CHK	APP
DWN BK	DATE 10/16/89	CHK	DATE	APP	DATE		
TOL: SHOP STD ☐ OTHER			SCALE: FULL ☐ OTHER				
TITLE MODEL 5 GEIGER COUNTER							
LUDLUM MEASUREMENTS, INC. 501 OAK STREET SWEETWATER, TEXAS 79556			SERIES 363		SHEET 223		

TABLE OF CONTENTS

1. GENERAL 1

2. SPECIFICATIONS 1

3. DESCRIPTION OF CONTROLS AND FUNCTIONS 2

4. OPERATING PROCEDURES 2

5. CALIBRATION 3
   5.1 Detector Operating Point 3
   5.2 Range Calibration 3

6. MAINTENANCE 3

7. THEORY OF OPERATION 4
   7.1 INPUT 4
   7.2 AMPLIFIER 4
   7.3 DISCRIMINATOR 4
   7.4 AUDIO 4
   7.5 DIGITAL ANALOG CONVERTOR 4
   7.6 SCALE RANGING 5
   7.7 METER DRIVE 5
   7.8 METER COMPENSATION 5
   7.9 FAST/SLOW TIME CONSTANT 5
   7.10 LOW VOLTAGE SUPPLY 5
   7.11 LOW VOLTAGE REFERENCE 5
   7.12 HIGH VOLTAGE SUPPLY 5
   7.13 DETECTOR OVERLOAD 5

PARTS LIST 6
   Model 5 Geiger Counter 6
      Circuit Board, Drawing 464 X 44 6
      Calibration Board, Drawing No. 363 X 519 7
      Chassis Wiring Diagram, Drawing No. 464 X 52 7

DRAWINGS AND DIAGRAMS 9

1. GENERAL

The Model 5 is a five-scale, self-contained Geiger Counter with two internal G-M tubes. The first three scales utilize an LND 7121 (or equivalent), while the two high scales use an LND 71412 (or equivalent). Both have 1/32-inch cadmium shields to attenuate low energy response. The instrument features a regulated high voltage power supply and provides five linear ranges up to 2000 mR/hr.

The unit body is made of ruggedized cast-aluminum, including the meter housing. The can is made of 0.090 aluminum. Other operating features of the unit include a unimorph speaker mounted to the instrument can with an audio ON-OFF capability, fast-slow meter response, meter reset button, overload circuit, battery check button and six-position switch for selecting scale multipliers of X0.1, X1, X10, X100, and X1000. Each range multiplier has its own calibration potentiometer.

2. SPECIFICATIONS

- **POWER**: two standard "D" size batteries
- **RANGES**: five linear from 0 to 2000 mR/hr; meter scale presentation of 0 to 2 mR/hr with range multiples of X0.1, X1, Xl0, X100, and X1000
- **INPUT SENSITIVITY**: 30 ±10 mV for the low range detector; 80 ±15 mV for the high range detector
- **AUDIO**: built-in unimorph speaker with an ON-OFF switch
- **HIGH VOLTAGE**: factory set at 550 volts
- **RESPONSE**: four seconds in fast "F" position and twenty-two seconds in slow "S" position for 90% of final meter reading
- **LINEARITY**: plus or minus 5% full scale
- **OVERLOAD**: holds meter at full-scale in high radiation fields
- **BATTERY LIFE**: exceeds 600 hours with a fresh set of alkaline "D" cell batteries
- **BATTERY DEPENDANCE**: Instrument calibration change less than 3% within Battery Check limits on the meter
- **METER**: 1mA, 2 1/2-inch scale, with pivot-and-jewel suspension
- **METER COMPENSATION**: temperature compensation is provided by thermistors on the Main Circuit Board
- **DETECTORS**: Two internal/energy compensated G-M detectors. One for ranges X0.1 through X10 and the other for the X100 and X1000 ranges
- **CALIBRATION CONTROLS**: Individual recessed potentiometers for each range
- **SIZE**: 10.67cm (4.2")H X 8.9cm (3.5")W X 21.6cm (8.5")L, exclusive of handle
- **WEIGHT**: 1.36kg (3 lbs.) less detector and batteries
- **FINISH**: computer-beige polyurethane enamel and silk-screened nomenclature

3. DESCRIPTION OF CONTROLS AND FUNCTIONS

- **Range Multiplier Selector Switch**: A six-position switch marked OFF, X1000, X100, X10, X1 and X0.1. Turning the range selector switch to one of the range multiplier positions (X1000, X100, X10, X1, or X0.1) provides the operator with an overall range of 0-2000 mR/hr. Multiply the scale reading by the multiplier for determining the actual scale reading.

- **AUDIO ON-OFF Toggle Switch**: In the ON position, the switch energizes the unimorph speaker, located on the left side of the instrument. The frequency of the clicks is relative to the rate of the incoming pulses. The higher the rate, the higher the audio frequency. The audio should be turned OFF when not required to reduce battery drain.

- **F-S Toggle Switch**: Provides meter response. Selecting the fast, "F", position of the toggle switch provides 90% of the final meter reading in four seconds. In slow, "S", position, 90% of the final meter reading takes 22 seconds. In "F" position there is fast response and large meter deviation. In "S"position there is a slow response and damped meter deviation.

- **RES Pushbutton**: When depressed, provides a rapid means to drive the meter to zero.

- **BAT Check**: When depressed, provides a visual means of checking the battery charge status. The instrument must be turned on to do this check.

- **Range Calibration Adjustment**: Recessed potentiometers located under the calibration cover, on the right side of the front panel. These adjustment controls allow individual calibration for each range multiplier.

4. OPERATING PROCEDURES

✔ Note: To open the Battery Lid, twist the lid button counterclockwise 1/4 turn. To close, twist clockwise 1/4 turn.

○ Open the Battery Lid and install two "D" size batteries. Note (+) (-) marks on the inside of the lid. Match the battery polarity to these marks.

✔ NOTE: Center post of flashlight battery is positive. Close the battery box lid.

○ Switch the range switch to X1000. Depress the BAT switch. The meter should deflect to the battery check portion of the meter scale. If the meter does not respond, recheck that the batteries have proper polarity.

○ Expose the internal detectors to a radiation check source. The speaker should click with the audio switch in the ON position. Move the range switch to the lower scales until a meter reading is indicated. The toggle switch labeled F-S should have fast response in "F" position; slow response in "S" position.

○ Press the RES switch. The meter should zero.

○ Check the calibration and proceed to use the instrument.

5. CALIBRATION

5.1 Detector Operating Point

☐ Remove the instrument housing and adjust R3 for 550 volts.

✔ NOTE: Measure High Voltage with a Model 500 Pulser or a High Impedance voltmeter with a high meg probe. If one of these is not available, use a voltmeter with a minimum of 1000 megohm input resistance.

☐ Replace the instrument housing.

5.2 Range Calibration

☐ Turn the instrument range multiplier switch to the appropriate range. Expose the detectors to a calibrated gamma field and adjust the respective range potentiometer for proper reading.

The internal detectors are located approximately 1/2" from the end of the instrument housing (meter end).

☐ Replace the instrument housing.

6. MAINTENANCE

Instrument maintenance consists of keeping the instrument clean and periodically checking the batteries and the calibration.

An instrument operational check should be performed prior to each use by exposing the detector to a known source and confirming the proper reading on each scale.

Recalibration should be accomplished after any maintenance or adjustment of any kind has been performed on the instrument. Battery replacements are not considered to be maintenance and do not normally require the instrument to be recalibrated.

Ludlum Measurements recommends recalibration at intervals no greater than one year. Consult the appropriate regulations to determine required recalibration intervals.

The batteries should be removed and the battery contacts cleaned of any corrosion at least every three months. If the instrument has been exposed to a very dusty or corrosive atmosphere, more frequent battery servicing should be used.

Use a spanner wrench to unscrew the battery contact insulators, exposing the internal contacts and battery springs. Removing the handle will facilitate access to these contacts.

✔ NOTE

NEVER STORE THE INSTRUMENT OVER 30 DAYS WITHOUT REMOVING BATTERIES. ALTHOUGH THIS INSTRUMENT WILL OPERATE AT VERY HIGH AMBIENT TEMPERATURES, BATTERY SEAL FAILURE CAN OCCUR AT TEMPERATURES AS LOW AS 100° FAHRENHEIT.

7. THEORY OF OPERATION

7.1 INPUT

Detector (V1) pulses are coupled from the detector through C3 to emitter follower Q5. R52 limits the current to V1. R10 and R20 provide bias. R32 protects Q5 from input shorts. R5 couples the detector to the high voltage supply.

Detector (V2) pulses are coupled from the detector through C27 to emitter follower Q7. R45 limits the current to V2. R21 and R41 provide bias to Q7. R40 protects Q7 from input shorts. R39 couples V1 to the high voltage supply.

Detector (V2) is used only when the range switch is in the X100 and X1K positions. In the X0.1, X1, and X10 ranges, detector (V1) is used. When in the X0.1, X1, and X10 ranges, P1-13 is at ground potential, turning off Q6, allowing the pulses from Q5 to pass on to the amplifier. P1-14 is opened allowing R16 to bias Q8, pulling the pulses from the base of Q7 to ground and blocking them from the amplifier. In the X100 and X1K ranges, P1-14 is grounded turning OFF Q8, allowing the pulses from Q7 to pass on to the amplifier. P1-13 is opened allowing R47 to bias Q6, pulling the pulses from the base of Q5 to ground and blocking them from the amplifier.

7.2 AMPLIFIER

A self-biased amplifier provides gain in proportion to R33 divided by R6 for the detector (V1) and R33 divided by R44 for detector (V2). Transistor (pin 6 of U1) provides amplification. Pin 10-15 of U1 are coupled as current mirror to provide a load for pin 6 of U1. The output self-biases to 2 Vbe (approximately 1.4 volts) at pin 7 of U1. This provides just enough bias current through pin 6 of U1 to conduct all of the current from the current mirror.

Positive pulses from pin 7 of U1 are coupled to the discriminator.

7.3 DISCRIMINATOR

Comparator U5 provides discrimination. The discriminator is set by the voltage divider, R8 and R50, coupled to pin 3 of U5. The output pulses are coupled to pin 5 of U6 for meter drive and pin 12 of U6 for audio.

7.4 AUDIO

Discriminator pulses are coupled to univibrator pin 12 of U6. Front panel audio ON-OFF selector controls the reset at pin 13 of U6. When ON, pulses from pin 10 of U6 turns on oscillator U2, which drives the can mounted unimorph. Speaker tone is set by R13,C12; duration by R36, C23.

7.5 DIGITAL ANALOG CONVERTOR

Pin 10-15 of U1 are coupled as a current mirror. For each pulse of current through R9, an equal current is delivered to C22 and R42. This charge is drained off by R42. The voltage across C22 is proportional to the incoming count rate.

7.6 SCALE RANGING

Detector pulses from the discriminator are coupled to univibrator pin 5 of U6. For each scale between X0.1 and X10, the pulse width of pin 6 of U6 is decreased by a factor of 10, with the actual pulse width being controlled by the front panel calibration controls and their related capacitors. This arrangement allows the same current to be delivered to C22 by one count on the X1 range as 100 counts on the X10 range. The X100 and X1K ranges hold the same factor of 10 relationship

between each other, but not to the lower ranges.

7.7 METER DRIVE

The meter is driven by the emitter to Q3, coupled as a voltage follower in conjunction with pin 1 of U3.
For Battery Test, the voltage follower is bypassed and the meter movement is directly coupled to the battery through R26.

7.8 METER COMPENSATION

When the unit is provided with a high torque meter movement, with 1.2 volt drive, a temperature compensation circuit (R15,R17, & R23) is provided on the Main Circuit board; components R15, R17 & R23.

7.9 FAST/SLOW TIME CONSTANT

For slow time constant, C29 is switched from the output of the meter drive to parallel C22.

7.10 LOW VOLTAGE SUPPLY

Battery voltage is coupled to U8 and associated components (a switching regulator) to provide 5 volts at pin 5 to power all logic circuits. Unregulated battery voltage is used to power the meter drive (Q3) and the high voltage blocking oscillator (Q2).

7.11 LOW VOLTAGE REFERENCE

U7 provides a 1.22 volt precision reference for HV supply.

7.12 HIGH VOLTAGE SUPPLY

High voltage is developed by blocking oscillator Q2-T1 and rectified by voltage multiplier CR2, C7, C11, and CR4. Output voltage increases as current through Q1 increases, with maximum output voltage with Q1 saturated.

High voltage is coupled back through R12 to opamp pin 6 of U3. R2 completes the high voltage circuit to ground. High voltage output is set by R3 (HV Set), which sets bias of pin 5 of U3. During stable operation, the voltage at pin 6 of U3 will equal the voltage at pin 5 of U3. Pin 7 of U3 will cause conduction of Q1 to increase or decrease until the high voltage seeks a level of stability.

7.13 DETECTOR OVERLOAD

The cathode of V2 is connected to the inverting (pin 6) input of voltage comparator U5. R38 and R49 voltage divider supplies a reference voltage to the noninverting (pin 5) input.

When the voltage drop across R46 raises the voltage at pin 6 above pin 5, pin 7 of U5 goes low, driving the meter circuit to full-scale output.

PARTS LIST

Ref. No.	Description	Part No.
Model 5 Geiger Counter		
UNIT	Completely Assembled Model 5 Geiger Counter	48-1607
Circuit Board, Drawing 464 X 44		
BOARD	Assembled Circuit Board	5464-044
• **CAPACITORS**		
C2	0.01µF, 100V, C	04-5523
C3	100pF, 3kV, C	04-5532
C4	0.01µF, 2kV, C	04-5525
C5	10µF, 20V, DT	04-5592
C7	0.0047µF, 3kV, C	04-5547
C8	0.001µF, 100V, C	04-5519
C9	100µF, 10V, DT	04-5576
C10	100pF, 3kV, C	04-5532
C11	0.0047µF, 3kV, C	04-5547
C12	470pF, 100V, C	04-5555
C13	0.01µF, 100V, C	04-5523
C14	1µF, 35V, DT	04-5575
C15	0.1µF, 100V, C	04-5521
C16-C17	100µF, 10V, DT	04-5576
C18	330pF, 100V, C	04-5531
C19	10µF, 20V, DT	04-5592
C20	0.001µF, 100V, C	04-5519
C21	100pF, 100V, C	04-5527
C22	10µF, 20V, DT	04-5592
C23	0.01µF, 100V, C	04-5523
C24	100µF, 10V, DT	04-5576
C25	10µF, 20V, DT	04-5592
C26-C27	100pF, 3kV, C	04-5532
C28	1µF, 35V, DT	04-5575
C29	47µF, 16V, DT	04-5520
• **TRANSISTORS**		
Q1	2N3904	05-5755
Q2	MPS6534	05-5763
Q3	2N3904	05-5755
Q4	MPSU51	05-5765
Q5	2N3904	05-5755
Q6	2N3904	05-5755
Q7	2N3904	05-5755
Q8	2N7000	05-5820

Ref. No.	Description	Part No.
• **INTEGRATED CIRCUITS**		
U1	CA3096	06-6023
U2	ICM7555	06-6136
U3	TLC27M7IP	06-6248
U4	CA3096	06-6023
U5	TLC372	06-6265
U6	CD4098	06-6066
U7	LM385Z-1.2	05-5808
U8	MAX631	06-6249
• **DIODES**		
CR2	GI-250	
CR4	GI-250	
CR5	1N4148	07-6272
• **RESISTORS**		
R1	1 MEG, 1/4W, 5%	10-7028
R2	1.5 MEG, 1/4W, 5%	10-7038
R3	1 MEG TRIMMER	09-6752
R4-R5	1 MEG, 1/4W, 5%	10-7028
R6-R7	4.7k, 1/4W, 5%	10-7014
R8	47k, 1/4W, 5%	10-7020
R9	22k, 1/4W, 5%	10-7070
R10	100k, 1/4W, 5%	10-7023
R11	10k, 1/4W, 5%	10-7016
R12	1G, 1/4W, 5%	12-7686
R13	470k, 1/4W, 5%	10-7026
R14	10k, 1/4W, 5%	10-7016
R16	100k, 1/4W, 5%	10-7023
R17	301 OHM, 1%	12-7855
R18	47k, 1/4W, 5%	10-7020
R19	1k, 1/4W, 5%	10-7009
R20-R21	100k, 1/4W, 5%	10-7023
R22	10k, 1/4W, 5%	10-7016
R24	200 OHM, 1/4W, 5%	10-7006
R25	2.2k, 1/4W, 5%	10-7012
R26	2.37k, 1%	12-7648
R27	22k, 1/4W, 5%	10-7070
R28	100 OHM, 1/4W, 5%	10-7004
R29	8.2k, 1/4W, 5%	10-7015
R30	100k, 1/4W, 5%	10-7023
R31-R32	10k, 1/4W, 5%	10-7016
R33	82k, 1/4W, 5%	10-7022
R34	10k, 1/4W, 5%	10-7016
R35	100k, 1/4W, 5%	10-7023

Ref. No.	Description	Part No.
R36	2.7 MEG, 1/4W, 5%	10-7029
R37	1k, 1/4W, 5%	10-7009
R38	220k, 1/4W, 5%	10-7066
R39	1 MEG, 1/4W, 5%	10-7028
R40	10k, 1/4W, 5%	10-7016
R41	100k, 1/4W, 5%	10-7023
R42	180k, 1/4W, 5%	10-7068
R43	10k, 1/4W, 5%	10-7016
R44	4.7k, 1/4W, 5%	10-7014
R45	2.2 MEG, 1/4W, 5%	10-7052
R46	10k, 1/4W, 5%	10-7016
R47	100k, 1/4W, 5%	10-7023
R48	10k, 1/4W, 5%	10-7016
R49	24k, 1/4W, 5%	10-7059
R50	15k, 1/4W, 5%	10-7017
R51	100k, 1/4W, 5%	10-7023
R52	3.3 MEG, 1/4W, 5%	10-7044
• **THERMISTORS**		
R15	R1006-98.4-59-D1	07-6332
R23	R1006-98.4-59-D1	07-6332
• **INDUCTORS**		
L1	470UHY	21-9600
• **TRANSFORMERS**		
T1	L8050	40-0902
• **MISCELLANEOUS**		
V1	GM-LND71210 EC LO-RANGE	01-5295
V2	GM-LND71412 EC HI-RANGE	01-5306
*	RECEPTACLE (10 ea) Cloverleaf 011-6809	18-8771
*	CONNECTOR (1 ea.) 640456-2 MTA100	13-8073
*	CONNECTOR (1 ea.) 1-640456-4 MTA100	13-8141

Ref. No.	Description	Part No.
Calibration Board, Drawing No. 363 X 519		
BOARD	Completely Assembled Calibration Board	5363-665
• **CAPACITORS**		
C1	0.0047μF 100V C X7R	04-5570
C2	0.047μF 100V C X7R	04-5565
• **RESISTORS**		
R1-R4	1 Meg Trimmer	09-6814
R5	100k Trimmer	09-6813
• **RESISTOR NETWORK**		
RN1	NETWORK 10k SIP 10PIN	12-7727
• **MISCELLANEOUS**		
P3	CONN-640456-7 MTA100	13-8115
Chassis Wiring Diagram, Drawing No. 464 X 52		
• **AUDIO**		
DS1	UNIMORPH 60690	21-9251
• **CONNECTOR**		
P1	CONN-1-640442-4 MTA100	13-8173
P2	CONN-640442-2 MTA100	13-8178
P3	CONN-640442-7 MTA100	13-8172
• **SWITCHES**		
S1	Centerlab PA600-210	08-6501
S2	#923 SWTCHCRFT	08-6518
S3-S4	7101-SYZ-QE	08-6511
S5	30-1-PB GRAYHILL	08-6517

Ref. No.	Description	Part No.
•	**BATTERY**	
B1-B2	"D" Duracell Battery	21-9313
•	**MISCELLANEOUS**	
*	BATTERY CONTACT SET Model 295	40-1707
*	CASTING Model 5	9363-287
*	MAIN HARNESS Model 5/14C	8363-620
*	PORTABLE CAN ASSY (MTA)	4363-441
*	PORTABLE KNOB	08-6613
M1	PORTABLE BEZEL FRONT ASSY	4363-188
*	METER BEZEL W/GLASS, W/O SCREWS	4363-352
*	METER MOVEMENT (1mA)	15-8030
*	PORTABLE METER FACE	7363-136
*	HARNESS-PORT CAN WIRES	8363-462
*	BATTERY LID W/LATCHSET Model 5	9363-288
*	PORT. LATCH KIT W/O BATT. LID	4363-349
*	PORT. CALIB. COVER W/SCREWS	9363-200
*	PORT. HANDLE (ROLLED) W/SCREWS	7363-139

DRAWINGS AND DIAGRAMS

Main Circuit Board, Drawing 464 x 44
Main Circuit Board Component Layout, Drawing 464 x 45
Calibration Board, Drawing 363 x 519
Calibration Board Component Layout, Drawing 363 x 520
Wiring Diagram, Drawing 464 x 52

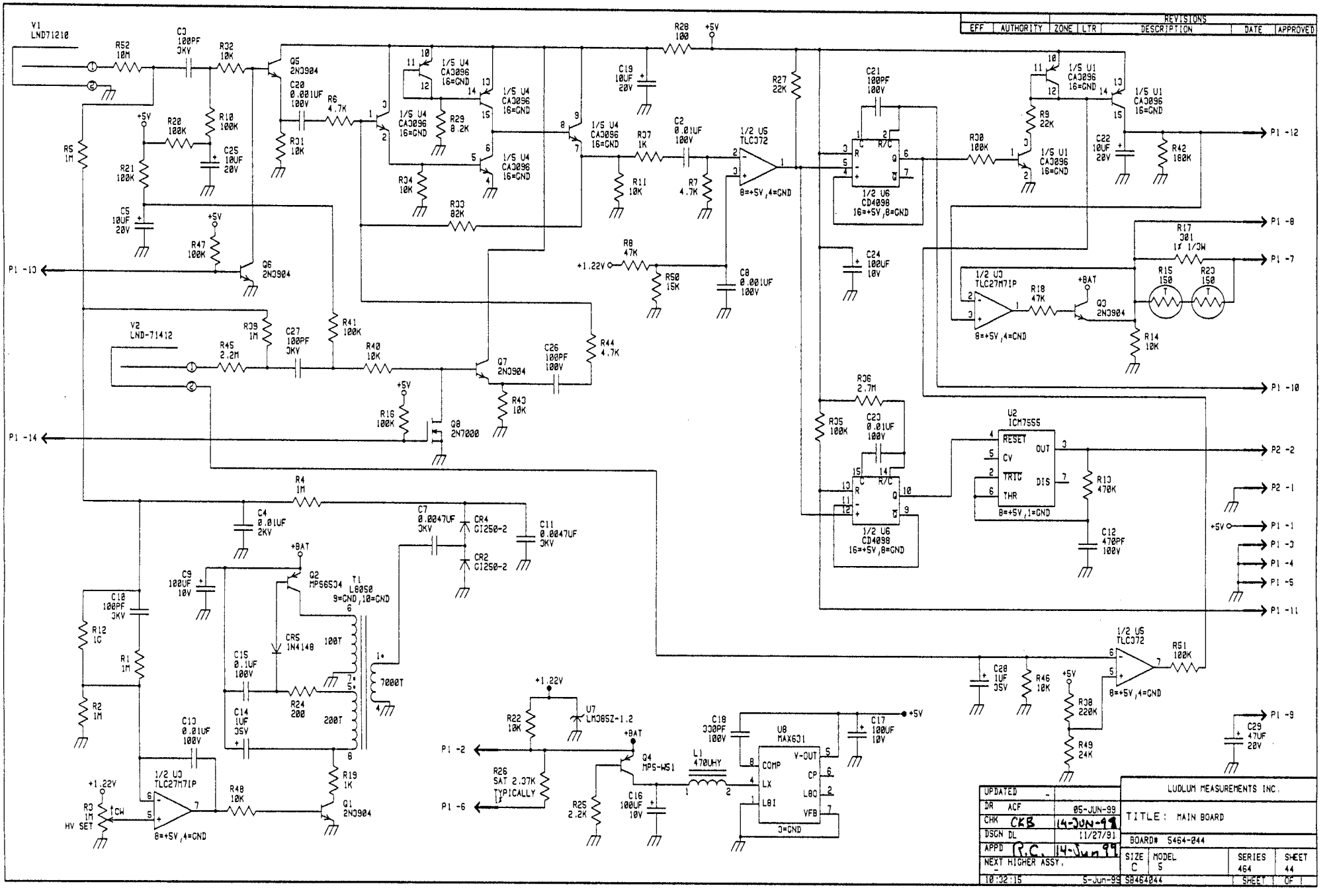
REVISIONS
EFF | AUTHORITY | ZONE | LTR | DESCRIPTION | DATE | APPROVED
V1 LND71210
V2 LND-71412
Q5 2N3904
Q6 2N3904
Q7 2N3904
Q8 2N7000
Q2 MPS6534
Q4 MPS-W51
Q1 2N3904
Q3 2N3904
T1 L8050 9=GND,10=GND
7000T
100T
200T
CR4 CI250-2
CR2 CI250-2
CR5 1N4148
1/5 U4 CA3096 16=GND
1/5 U1 CA3096 16=GND
1/2 U5 TLC372
8=+5V,4=GND
1/2 U6 CD4098 16=+5V,8=GND
1/2 U3 TLC27M7IP
U2 ICM7555
RESET
CV
TRIG
THR
OUT
DIS
8=+5V,1=GND
U7 LM385Z-1.2
U8 MAX631
COMP
LX
LBI
V-OUT
CP
LBO
VFB
J=GND
R17 301 1% 1/3W
R15 150
R20 150
R14 10K
R42 180K
R43 10K
R44 4.7K
R50 15K
R51 100K
R46 10K
R38 220K
R49 24K
R26 SAT 2.37K TYPICALLY 1%
R3 1M HV SET
CW
P1 -1
P1 -2
P1 -3
P1 -4
P1 -5
P1 -6
P1 -7
P1 -8
P1 -9
P1 -10
P1 -11
P1 -12
P1 -13
P1 -14
P2 -1
P2 -2
+5V
+1.22V
+BAT
UPDATED
DR ACF 05-JUN-99
CHK CKB 14-JUN-99
DSGN DL 11/27/91
APPD R.C. 14-Jun 99
NEXT HIGHER ASSY.
10:32:15 5-Jun-99
LUDLUM MEASUREMENTS INC.
TITLE: MAIN BOARD
BOARD# 5464-044
SIZE C | MODEL 5 | SERIES 464 | SHEET 44
SB464044 | SHEET 1 OF 1

BOARD
DIMENSIONS:
WIDTH =5.147"
HEIGHT=2.810"

MOUNTING HOLE
LOCATIONS:
1. X=0.140"
Y=0.734"
2. X=4.897"
Y=0.250"
3. X=4.897"
Y=2.560"
4. X=0.140"
Y=2.076"

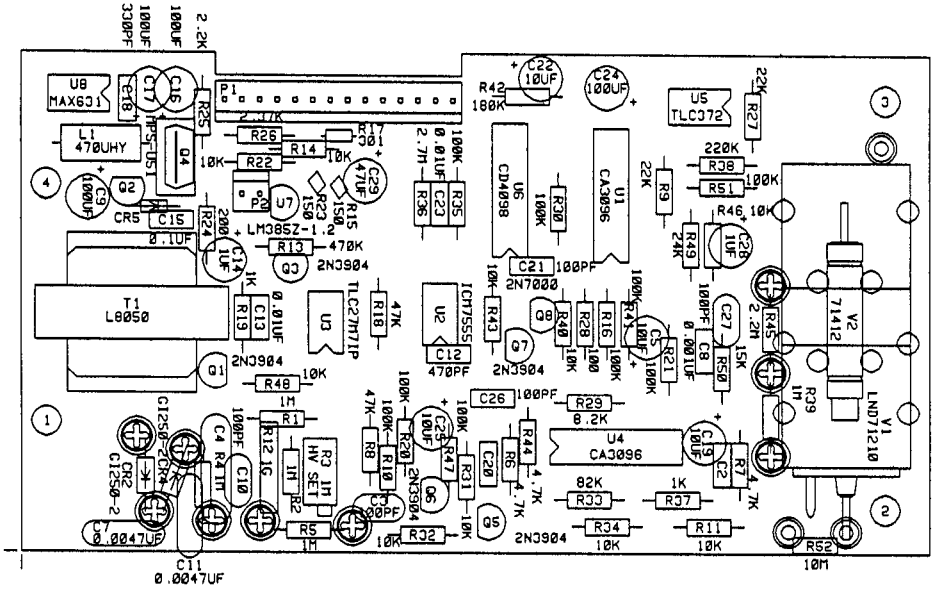

LUDLUM MEASUREMENTS INC. SWEETWATER, TX.						
DR ACF	14-JUN-99	TITLE: MAIN BOARD				
CHK CWS	14-JUN-99	BOARD: 5464-044				
DSGN DL	27-NOV-91	MODEL: S				
APP R.C.	14 Jun 99	FILENAME: BS464044				
COMPONENT	SOLDER	11:32:44	14-Jun-99			
		REVISION	SERIES	SHEET		
OUTLINE	OUTLINE	1.0	464	45		

REVISIONS						
EFF	AUTHORITY	ZONE	LTR	DESCRIPTION	DATE	APPROVED

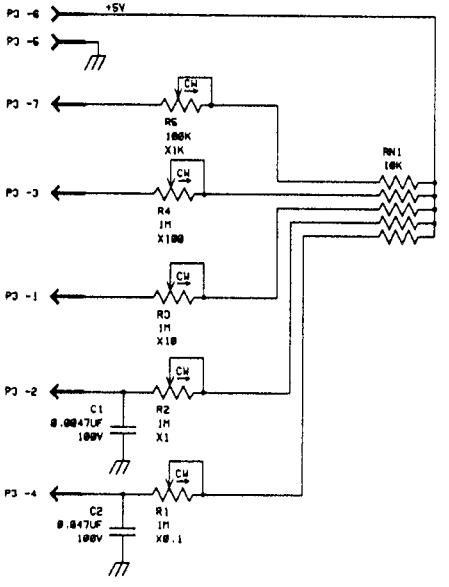

UPDATED -	/ /	LUDLUM MEASUREMENTS INC.	
DR CKB	03/26/92	TITLE: CALIBRATION BOARD	
CHK DW	3/26/92		
DSGN -	/ /	BOARD# 5363-665	
APPD JGW	3/30/92	SIZE D / MODEL 5	SERIES 363 / SHEET 519
NEXT HIGHER ASSY. -			
10:48:21	26-Mar-92	58363665	SHEET 1 OF 1

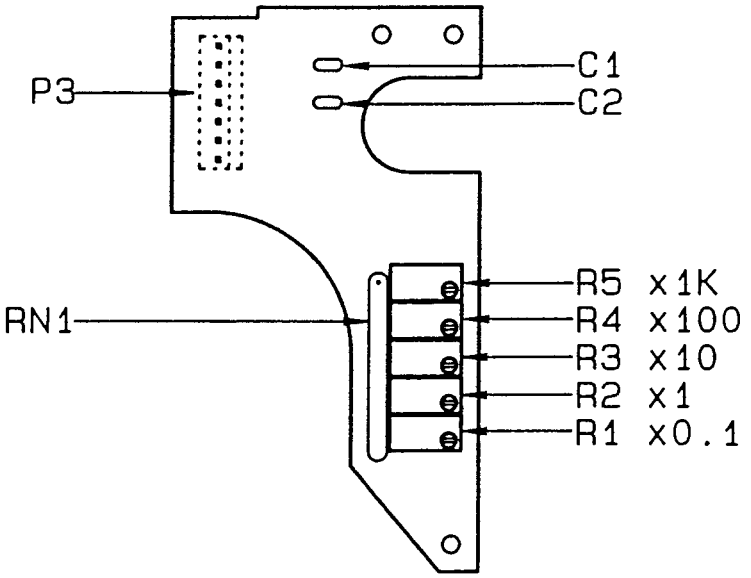

DESC: COMPONENT OUTLINE	
MODEL: 5	
PART #: 5363-665	
DWN: CKB	DATE: 03/26/92
DSGN:	DATE:

CHG	NO.					DWN	CHK	APP
DWN CKB	DATE 03/26/92	CHK	DATE 3-28-92	APP	DATE 3-30-92		
TOL: SHOP STD ☒ OTHER				SCALE: FULL ☒ OTHER			
TITLE MODEL 5 CALIBRATION BOARD							
LUDLUM MEASUREMENTS, INC. 601 OAK STREET SWEETWATER, TEXAS 79556				SERIES 363		SHEET 520	

REVISIONS						
EFF	AUTHORITY	ZONE	LTR	DESCRIPTION	DATE	APPROVED

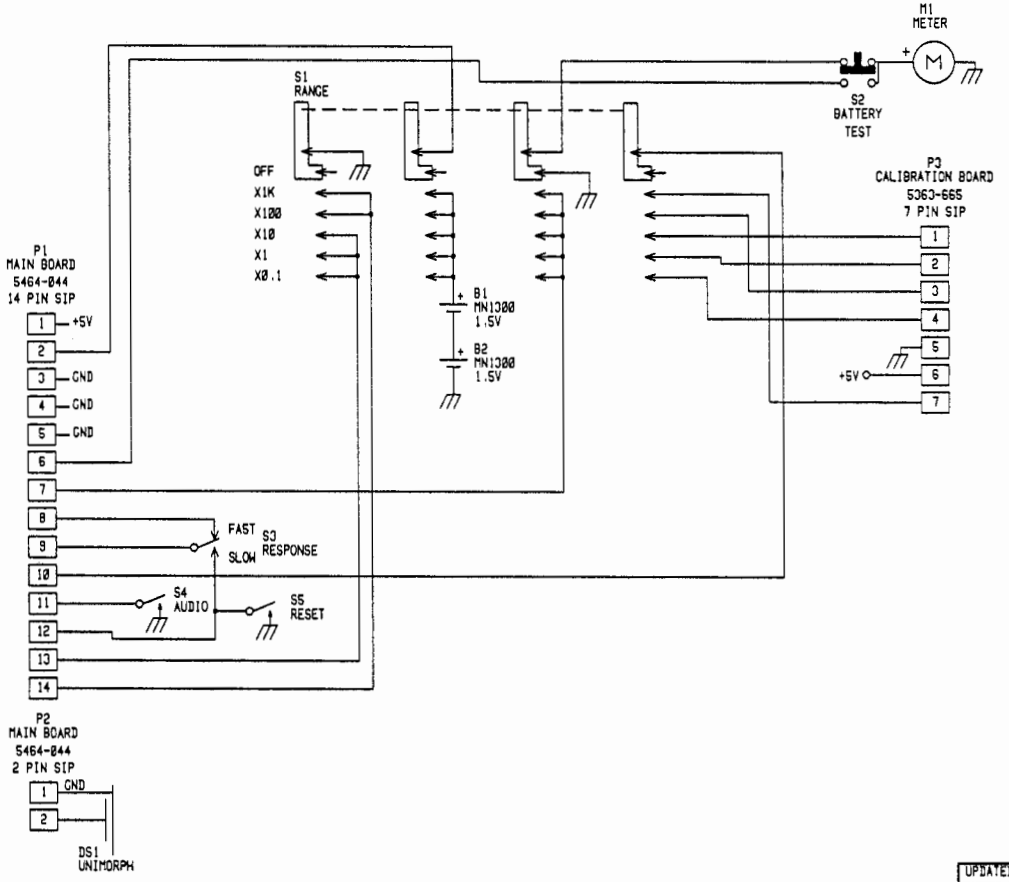

UPDATED	-		LUDLUM MEASUREMENTS INC.
DR	ACF	12-JUL-99	TITLE: WIRING DIAGRAM
CHK	CKB	12-JUL-99	
DSGN	-		BOARD# W464-052
APPD	RDS	12 Jul 99	SIZE C / MODEL 5 / SERIES 464 / SHEET 52
NEXT HIGHER ASSY.	-		
11:05:10		12-JUL-99	SB464052 SHEET 1 OF 1